Low-energy spectrum of Toeplitz operators

Alix Deleporte-Dumont

Thèse

INSTITUT DE RECHERCHE MATHÉMATIQUE AVANCÉE

UMR 7501

Strasbourg

présentée pour obtenir le grade de docteur de
l'Université de Strasbourg
Spécialité MATHÉMATIQUES

Alix Deleporte

Low-energy spectrum of Toeplitz operators

Soutenue le 29 Mars 2019
devant la commission d'examen

Nalini Anantharaman, directrice de thèse
Laurent Charles, rapporteur
David Borthwick, rapporteur
San Vũ Ngọc, examinateur
Yves Colin de Verdière, examinateur
Benoît Douçot, examinateur

irma.math.unistra.fr

Institut de Recherche Mathématique Avancée

Université de Strasbourg

LOW-ENERGY SPECTRUM OF TOEPLITZ OPERATORS

ALIX DELEPORTE

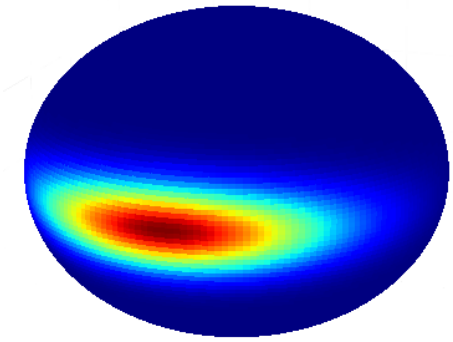

March 29, 2019

This document was typeset using the typographical look-and-feel `classicthesis` developed by André Miede, with several tweaks by the author, according to the GNU General Public Licence. The style was inspired by Robert Bringhurst's seminal book on typography "*The Elements of Typographic Style*". `classicthesis` is available for both LaTeX and LyX:

https://bitbucket.org/amiede/classicthesis/

The improved template is available by email request.

ABSTRACT

Berezin-Toeplitz operators allow to quantize functions, or symbols, on compact Kähler manifolds, and are defined using the Bergman (or Szegő) kernel. We study the spectrum of Toeplitz operators in an asymptotic regime which corresponds to a semiclassical limit. This study is motivated by the atypic magnetic behaviour observed in certain crystals at low temperature.

We study the concentration of eigenfunctions of Toeplitz operators in cases where subprincipal effects (of same order as the semiclassical parameter) discriminate between different classical configurations, an effect known in physics as *quantum selection*. We show a general criterion for quantum selection and we give detailed eigenfunction expansions in the Morse and Morse-Bott case, as well as in a degenerate case.

We also develop a new framework in order to treat Bergman kernels and Toeplitz operators with real-analytic regularity. We prove that the Bergman kernel admits an expansion with exponentially small error on real-analytic manifolds. We also obtain exponential accuracy in compositions and spectra of operators with analytic symbols, as well as exponential decay of eigenfunctions.

Les opérateurs de Berezin–Toeplitz permettent de quantifier des fonctions, ou des symboles, sur des variétés kähleriennes compactes, et sont définies à partir du noyau de Bergman (ou de Szegő). Nous étudions le spectre des opérateurs de Toeplitz dans un régime asymptotique qui correspond à une limite semiclassique. Cette étude est motivée par le comportement magnétique atypique observé dans certains cristaux à basse température.

Nous étudions la concentration des fonctions propres des opérateurs de Toeplitz, dans des cas où les effets sous-principaux (du même ordre que le paramètre semiclassique) permet de différencier entre plusieurs configurations classiques, un effet connu en physique sous le nom de « sélection quantique ». Nous exhibons un critère général pour la sélection quantique et nous donnons des développements asymptotiques précis de fonctions propres dans le cas Morse et Morse–Bott, ainsi que dans un cas dégénéré.

Nous développons également un nouveau cadre pour le traitement du noyau de Bergman et des opérateurs de Toeplitz en régularité analytique. Nous démontrons que le noyau de Bergman admet un développement asymptotique, avec erreur exponentiellement petite, sur des variétés analytiques réelles. Nous obtenons aussi une précision exponentiellement fine dans les compositions et le spectre d'opérateurs à symbole analytique, et la décroissance exponentielle des fonctions propres.

PUBLICATIONS

Some ideas have appeared previously in the following publications or prepublications:

[Del16] Alix Deleporte. "Low-Energy Spectrum of Toeplitz Operators: The Case of Wells." In: *Journal of Spectral Theory (accepted)* (2016).

[Del17] Alix Deleporte. "Low-Energy Spectrum of Toeplitz Operators with a Miniwell." In: *arXiv* 1610.05902 (2017).

[Del18a] Alix Deleporte. "Quantum Selection for Spin Systems." In: *arXiv* 1808.00718 (2018).

[Del18b] Alix Deleporte. "The Bergman Kernel in Constant Curvature." In: *arXiv* 1812.06648 (2018).

[Del18c] Alix Deleporte. "Toeplitz Operators with Analytic Symbols." In: *arXiv* 1812.07202 (2018).

[Del19] Alix Deleporte. "WKB Eigenmode Construction for Analytic Toeplitz Operators." In: *arXiv* 1901.07215 (2019).

ACKNOWLEDGEMENTS

This means either that the universe is more full of wonders than we can hope to understand or, more probably, that scientists make things up as they go along. —

Terry Pratchett

La thèse est un sport de combat. L'issue de cette lutte aurait sans doute été toute autre sans le soutien moral et scientifique de mon entourage, auquel je suis redevable.

J'ai trouvé à l'IRMA et à l'UFR Math-Info un environnement de travail idyllique, dans lequel j'ai eu la chance d'interagir avec des personnes curieuses, honnêtes, sympathiques et prêtes à partager leurs connaissances. Je souhaiterais remercier en premier lieu ma directrice de thèse, Nalini Anantharaman, pour sa patience à mon égard, pour tout ce qu'elle m'a appris, et pour la liberté qu'elle m'a laissée dans l'évolution de mes travaux. J'ai été acueilli dans l'équipe d'Analyse comme un membre à part entière, ce dont je remercie toutes les autres personnes de l'équipe. Je remercie en particulier Yohann Le Floch, Amaury Bittmann, Frédéric Valet, Guillaume Klein, Maxime Ingremeau, Thomas Drefyus, Mostafa Sabri, Martin Vogel et Laura Monk pour leur camaraderie. En-dehors de l'équipe, j'ai eu des interactions mathématiques privilégiées avec plusieurs membres du laboratoire, ce dont je les remercie : Emmanuel Opshtein (qui m'a fait l'honneur d'accepter de siéger dans mon jury), Thomas Delzant, Federica Fanoni, Xiaolin Zeng, Guillaume Dollé, Vladimir Fock, Nicolas Juillet.

J'ai eu la chance de participer à plusieurs événements organisés par la communauté de l'analyse semiclassique, ce dont je remercie l'organisateur du projet ANR Gerasic, Luc Hillairet ; les organisateurices du GDR Dynqua, Nalini Anantharaman, Jean-Marc Bouclet, Benoît Douçot et Frédéric Hérau ; et les organisateurs du séminaire dit « tournant » : Hakim Bouzama, Mathieu Lewin et Stéphane Nonnenmacher. Lors de ces rencontres, j'ai fait la connaissance de nombreuses personnes (ou continué de les croiser, pour celles que je connaissais avant) auxquelles le contenu de cette thèse, et ma motivation à continuer à travailler dans ce domaine, doivent beaucoup : dans le désordre croissant, je remercie Bernard Helffer, Yves Colin de Verdière, Frédéric Faure, Laurent Charles, Benoît Douçot, San Vũ Ngọc, Stéphane Nonnenmacher, Françoise Truc, Gabriel Rivière, Nguyen Viet Dang, Luc Gossard, Étienne Le Masson, Frédéric Naud, Tobias Weich, Hugo Federico, Alejandro Rivera, Nguyen Thi Dang, Alexandre Martin, Jean-François Bougron, Steven Zelditch, Nicolas Burq, Leonid Polterovich, Maciej Zworski, Damien Gayet, Magda Khalile, Thomas Ourmières-Bonnafos, Vincent Beffara, Jean Lagacé, André Voros.

Mon séjour à l'Université de Strasbourg ne saurait se limiter à des activités de recherche. Le séminaire doctorant, et les diverses activités associées, a constitué pour moi une source d'intégration et un vivier d'amitiés ; j'en remercie particulièrement les organisateurices, Audrey, Cuong, Philippe R. et Nicolas. Je remercie tous les doctorants et toutes les doctorantes du laboratoire, et plus particulièrement, en

plus des personnes que j'ai déjà mentionnées, Amandine, Alex T., Xing, Pierre-Alexandre, Marie, Manu, Alexander S., Philippe, Claire, Djibril...

Je remercie très chaleureusement Tatiana Beliaeva pour l'énergie qu'elle consacre au Cercle Mathématique de Strasbourg, et en particulier, pour toutes les compétences pédagogiques qu'elle a partagé avec moi ; merci également à Alexander Thomas et Laura Monk pour leur implication dans ces activités. Je remercie par ailleurs Loïc Teyssier pour la confiance qu'il m'a apportée durant ceux de mes enseigenements qui étaient sous sa responsabilité.

Un laboratoire et un département ne pourraient fonctionner sans les différents services techniques et administratifs qui les sous-tendent. Je remercie Jessica Maurer-Spoerk, Delphine Schmitt, Delphine Karleskind, Sandrine Cerdan, Pascale Igot, Sandrine Alberelli, Myriam Pepino, Marounia Kremer, Grégory Thureau, Alexis Palaticky, Alain Sartout, Matthieu Boileau, Daniel Grosson et Philippe Sablon pour leur soutien dans mes démarches administratives.

Je remercie enfin tous mes cobureaux, et tous mes colocataires, pour leur abnégation et toutes ces choses partagées de la vie quotidienne : Nicolas, les deux Laura, Maxime et Martin.

Un orchestre entier ne rentre pas dans l'espace dévolu à des remerciements ; pourtant c'est l'intégralité de l'Orchestre Universitaire de Strasbourg que je remercie. En particulier, je remercie notre cheffe Corinna, pour sa fougue, ses idées toujours originales et réussies, sa ténacité lors des répétitions, et pour toute la musique qu'elle partage avec nous. Je remercie aussi les personnes qui contribuent ou ont contribué à l'organisation de cet orchestre : Benjamin, Hervé, Simon, Hélo, Tristan, Jeanne, Maëva, Nico, Laurie, Marie, Thomas, Marc-Antoine, Ayoub, Nathalie, Pierre, Lara, Thérèse, Clara, Louise. Je remercie également les personnes avec lesquelles j'ai eu la chance de faire de la musique en petit effectif : les deux Thomas, Laurie, Vanille, Nathalie, Ayoub, Louise, Marie, Oriane, Pierrick, Thibaut, Chloé, Benjamin et Lara. J'ai une pensée particulière pour ma copupitre Marine, que je remercie pour son amitié et son sens du partage.

En-dehors de l'orchestre univeritaire, je remercie Alex, Ève et Corentin du cercle des Mélomanes[1] ; Christophe le Divenah et sa « bande de Hautboys » ; Marinu, Ève, Chloé, Mathilde, Pierre, Marie, Nicolas, Camille, Constance et Thomas pour les bons moments musicaux passés à Autun.

Je remercie l'ensemble de mes *mutuals* Twitter pour leur soutien et les moments de convivialité : mixlamalice, ThomsLrn, krazykitty, freecuddles, chtruchet, krakramille, alpha426, Blouchtika, vasyjuly, EvpokPadding, aurelia_dalma, Jio15Fr, JulienGossa, Lina_Lhv, tomzrah, Blip_Bloup, nxrdboy...

Je remercie également les « anciens » : Jacques, Guillaume, Marie, Gabriel K., Lina, Johan, Gabriel L., Marie-Lys, Mathilde, Célia. Je remercie très chaleureusement Marine, Thérèse, Laura et Xiaolin pour avoir bien voulu relire ce manuscrit.

Mes pensées vont à ma famille, qui m'a toujours encouragé et soutenu, et à qui cette thèse est dédiée : Chloé, Sophie, Étienne, Louise, Nicole, Jonathan, et les petits chiens et chats Looping, Nouchka, Osiris et surtout Harry, parti trop tôt.

1 Deux cercles distincts s'intersectent en deux points.

CONTENTS

INDEX OF NOTATIONS

$i \sim j$	i and j are neighbours in the graph
$\langle \cdot, \cdot \rangle$	Scalar product on a Hilbert space
$\mathbb{1}_U$	Indicator function of U (equal to 1 on U and 0 elsewhere)
L_U	Bundle $L \to M$ restricted to a set $U \in M$
L_x	Fibre over a point $x \in M$ in the bundle L
$L_1 \boxtimes L_2$	Pointwise tensor product of vector bundles (Subsection 6.1.1)
$L^2(M, L)$	Space of square-integrable sections of the bundle L
$H^0(M, L)$	Space of square-integrable holomorphic sections of L
S_N	Szegő or Bergman projector (Definitions 2.2.4 and 2.2.10)
$T_N(f)$	Contravariant Toeplitz operator associated with f (Def. 2.2.7)
$\sigma(A)$ or $\mathrm{Sp}(A)$	Spectrum of the matrix or endomorphism A
$T_N^{cov}(f)$	Covariant Toeplitz operator associated with f (Def. 8.2.1)
$\mathcal{B}_N$	Bargmann transform (Definition 2.1.2)
$Op_W^{\hbar}(f)$	Weyl quantization of f
μ	Melin value (Definition 4.2.7)
$O(t^\infty)$	$O(t^k)$ for all $k \geq 0$

1 INTRODUCTION

Semiclassical analysis studies the link between quantum and classical mechanics; it is mostly performed in the context of Schrödinger operators and their generalisations, using pseudodifferential operators. Motivated by recent discoveries in magnetic materials, we studied a semiclassical limit for quantum spin systems, using Berezin-Toeplitz operators[1], which are self-adjoint operators on a Hilbert space, depending on a parameter $N \in \mathbb{N}$. In this thesis, we study the smallest eigenvalues, and their associated eigenvectors, of Toeplitz operators, with applications to the low-temperature properties of materials.

1.1 The large spin limit

In this work, we study the spectrum of *Toeplitz operators*, using tools from semiclassical analysis and complex geometry. Our principal motivation is the study of quantum *spin systems* in the large spin limit. Spin systems describe the magnetic behaviour of solids; some crystals such as Jarosite layers or Holmium titanate exhibit unusual and partly unknown behaviour at low temperature, including the emergence of *spin ices* [Mat+02; Har+97; Lag+10] and, presumably, *spin liquids* [DMS12; Iqb+13; IPB14].

The quantum model of a single spin, which describes internal magnetic degrees of freedom in a single particle, consists in a triplet of Hermitian matrices (S_x, S_y, S_z) acting on a finite-dimensional Hilbert space $\mathcal{H}$, which follow the commutation rules

$$[S_x, S_y] = iS_z \qquad [S_y, S_z] = iS_x \qquad [S_z, S_x] = iS_y.$$

Such triplets are classified by the dimensions of their irreductible components; there is exactly one triplet, up to conjugation, for each dimension. This dimension is related to the *total spin* (or simply *spin*) of the model, which is the number S such that the dimension of the Hilbert space $\mathcal{H}$ is $2S + 1$. The most simple example, at spin $S = \frac{1}{2}$, consists in the three Pauli matrices [Gou25]:

$$S_x = \frac{1}{2}\begin{pmatrix} 0 & 1 \\ 1 & 0 \end{pmatrix} \qquad S_y = \frac{1}{2}\begin{pmatrix} 0 & i \\ -i & 0 \end{pmatrix} \qquad S_z = \frac{1}{2}\begin{pmatrix} -1 & 0 \\ 0 & 1 \end{pmatrix}.$$

One models the magnetic interactions between several identical atoms by an operator on a tensor power of $\mathcal{H}$. If there are d atoms, the corresponding Hilbert space is $\mathcal{H}^{\otimes d}$. For $1 \leq j \leq d$ the operator $I^{\otimes j-1} \otimes S_x \otimes I^{\otimes d-j}$ is the first component of the spin at the atom j; we denote it by S_x^j. Spin operators are then defined as polynomials in the operators S_a^j for $1 \leq j \leq d$ and $a \in \{x, y, z\}$. As an example,

1 We will more simply say "Toeplitz operators" over the course of this manuscript; see the end of Section 1.2 for disambiguation

if the atoms form an undirected graph, so that some atoms are connected to each other, for $J \in \mathbb{R}$ one can form the Heisenberg operator

$$H_{Heis} = J\left[\sum_{j\sim k} S_x^j S_x^k + S_y^j S_y^k + S_z^j S_z^k\right].$$

Here we write $j \sim k$ to indicate that the atoms j and k are neighbours in the graph. If $J < 0$ the model is called *ferromagnetic*. If $J > 0$ it is called *antiferromagnetic*.

Low-temperature properties of a material are related to the low-lying eigenvalues, and the corresponding eigenvectors, of a spin operator. In real-life situations there is no hope to diagonalize this matrix of size $\dim(\mathcal{H})^d = (2S+1)^d$, where d is the number of atoms in the material and is of order 10^{23} (one mole).

In an effort to study the thermodynamics of such systems as well as the eigenvectors associated with the smallest eigenvalue, named *ground states*, a *classical model* was proposed in [BK52] and corresponds, to some extent, to the large spin limit $S \to +\infty$, in the same way that classical mechanics is a limit case of quantum mechanics when the Planck constant $\hbar$ is very small.

In the classical spin model, one spin is an element of the sphere $\mathbb{S}^2$, so that the configuration space with d spins is $(\mathbb{S}^2)^d$, and spin operators are polynomials in the coordinates. For instance, the classical Heisenberg model is the following function on $(\mathbb{S}^2)^d$:

$$h_{Heis} = J\left(\sum_{j\sim k} x_j x_k + y_j y_k + z_j z_k\right).$$

Here x, y, z are the three coordinates for the usual immersion of the sphere in $\mathbb{R}^3$. It is much simpler to find the minimum of the smooth function h_{Heis} than to find eigenvalues and eigenvectors of a large matrix; if $J > 0$ for instance, and if the graph is bipartite, minimal *classical* configurations are such that neighbour spins are opposite to each other. However, there are no general explicit expression of the lowest eigenvalue and the associated eigenvectors of the antiferromagnetic quantum Heisenberg model.

A more intuiguing situation for the classical Antiferromagnetic Heisenberg model is the *frustrated* case, that is, when the graph is non-bipartite. If three atoms in the graph form a triangle, it is not possible that each spin is opposite to its two neighbours. The crystals cited above exhibit this phenomenon; for instance, Jarosite and Herbertsmithite contain two-dimensional layers of atoms forming a Kagome lattice as in Figure 1. The minimal set of the classical antiferromagnetic Heisenberg model on the Kagome lattice (or its finite subgraphs) is an algebraic manifold which is not smooth. Various configurations have minimal energy but there is no global symmetry mapping one to the other: indeed, a non-regular point cannot be mapped to a regular point. The presence or absence of symmetries is crucial in the analysis of the quantum case: if the model presents a symmetry, one expects the ground state to be invariant under this symmetry, so that it will be evenly spread out near classical minimal configurations. In the case of the Kagome lattice, since there is no underlying symmetry, the behaviour of the ground state is unknown.

In the setting of semiclassical Schrödinger operators $-\hbar^2\Delta + V$, where V is a real-valued function acting as a multiplication operator, as $\hbar \to 0$, the properties of low-energy states, and the link with the underlying classical problem, are well-known. In the general case, the ground state concentrates on the set where V is

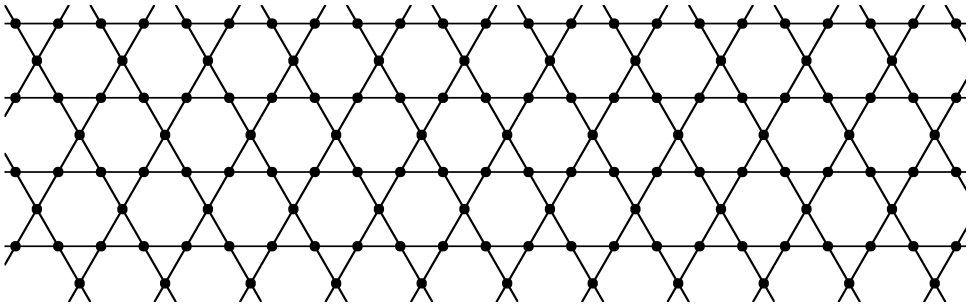

Figure 1: The Kagome lattice

minimal. In some situations one can be more precise. Helffer and Sjöstrand [HS86a] studied situations where V is minimal along a submanifold, but where this manifold does not correspond to a global symmetry for V. The classical *degeneracy* (there are many configurations at minimal energy) is then lifted for the associated quantum system: as $\hbar \to 0$ the ground state of this operator will only concentrate on some parts of the minimal set of V. This phenomenon is called *quantum selection*.

Using the analogy between semiclassical analysis and the large spin limit, Douçot and Simon [DS98] predicted quantum selection for the Heisenberg antiferromagnetic model on the Kagome lattice, in the large spin limit: among the very complicated subset of minimal classical energy, low-energy quantum eigenfunctions should concentrate (in some sense to be made precise) only on some particular configurations, as the spin S goes to infinity. This result is not contained in [HS86a], which only studies Schrödinger operator, and in which the classical minimal set is a smooth manifold.

Theoretical investigations for quantum selection were conducted by some physicists in the large spin limit [Chu92; RB93; DS98] but they do not stem from rigorous results, and some terms are missing in the computations, leading to an incorrect semiclassical description for certain systems.

Part of the results in this thesis are concerned with quantum selection for spin systems in the large spin limit, and their generalisations (Toeplitz operators). We prove that quantum selection takes place in a general setting, following an explicit criterion. We also study the rate of decay of the ground state outside the minimal set in the large spin limit: in the general case it decays faster than any power of S^{-1}; in real-analytic regularity it decays faster than e^{-cS} for some $c > 0$. Our main contributions are described in Section 1.3.

1.2 Toeplitz quantization

The link between quantum and classical mechanics involves a *quantization procedure*, which associates to a classical model a quantum model with some parameter $\hbar$, and then a *semiclassical analysis* of the quantum model in the limit $\hbar \to 0$.

A quantization procedure consists in associating to a symplectic manifold M a Hilbert space $\mathcal{H}$, and to a real-valued function f on M a self-adjoint operator $Op(f)$ on $\mathcal{H}$, depending on $\hbar$, such that the Poisson bracket of functions corresponds to the commutator of operators as $\hbar \to 0$, that is,

$$[Op(f), Op(g)] = i\hbar Op(\{f, g\}) + O(\hbar^2).$$

The most famous quantization procedure is *Weyl quantization* which associates to a function on the cotangent space $M = T^*X$ of a Riemannian manifold a pseudo-differential operator on $\mathcal{H} = L^2(X)$. Spin systems are not adapted to the Weyl framework. Indeed, for spin operators, the Hilbert space $\mathcal{H}$ should be finite-dimensional (of dimension $(2S+1)^d$) and the classical configuration space M (also named *phase space*), a product of spheres, is compact.

On some complex manifolds, a convenient quantization procedure is Toeplitz quantization, introduced by Berezin for spin systems [Ber75]. The geometric ingredients are a symplectic manifold M with a complex structure[2], and a complex line bundle L over M, with a Hermitian metric on L. The sphere $\mathbb{S}^2 = \mathbb{CP}^1$ is a particular case of symplectic manifold on which one can perform Toeplitz quantization.

The quantum Hilbert space $\mathcal{H}$ in Toeplitz quantization is the space of square-integrable holomorphic sections of L, or more generally its tensor powers $L^{\otimes N}$ for $N \in \mathbb{N}$. If M is compact, the concept of holomorphic sections is much richer than holomorphic functions since, in this case, holomorphic functions are constant. In the flat case $M = \mathbb{C}^n$ there are many holomorphic functions, but among them only the zero function is square-integrable, while the *Bargmann space* (see Subsection 2.1.2) of holomorphic functions that grow slower than $z \mapsto e^{|z|^2}$ is infinite-dimensional. In all cases there are much more holomorphic sections of L than holomorphic functions on M.

The Hilbert space of holomorphic sections of $L^{\otimes N}$ will be denoted $H^0(M, L^{\otimes N})$ (Definition 2.2.10). This space is naturally a closed subspace of $L^2(M, L^{\otimes N})$, the space of all (not necessarily holomorphic) square-integrable sections of $L^{\otimes N}$; as such, there is an orthogonal projector

$$S_N : L^2(M, L^{\otimes N}) \to H^0(M, L^{\otimes N}).$$

The *Bergman projector* S_N is the main ingredient in the quantization of functions on M. The *Toeplitz operator* (or, more precisely, contravariant Toeplitz operator) associated with a function $f \in C^\infty(M, C)$ is defined as

$$\begin{array}{rccc} T_N(f): & H^0(M, L^{\otimes N}) & \to & H^0(M, L^{\otimes N}) \\ & u & \mapsto & S_N(fu). \end{array}$$

If f is real-valued and has moderate growth at infinity, then $T_N(f)$ is essentially self-adjoint on the domain $\{u \in H^0(M, L^{\otimes N}), |u|_h^2 |f| \in L^1(M)\}$. Toeplitz operators do not form an algebra. However, there are asymptotic expansions of the products of two Toeplitz operators [Sch00; Cha03] as

$$T_N(f)T_N(g) = T_N(fg) + N^{-1}T_N(C_1(f,g)) + N^{-2}T_N(C_2(f,g)) + \dots,$$

where the C_j's are bidifferential operators.

In particular, if $\{\cdot,\cdot\}$ denotes the Poisson bracket corresponding to the symplectic structure on M, then it can be shown that

$$[T_N(f), T_N(g)] = \frac{i}{N} T_N(\{f,g\}) + O_{L^2 \mapsto L^2}(N^{-2}).$$

The parameter N corresponds to $\hbar^{-1}$ in the semiclassical interpretation.

2 under some geometrical hypotheses: it should be a *quantizable Kähler manifold*

One can also define *covariant Toeplitz operators*, which are kernel operators whose associated symbol is the restriction of the kernel on the diagonal. Covariant and contravariant Toeplitz quantization are equivalent up to a subprincipal modification and a $O(N^{-\infty})$ error.

If M is compact then $H^0(M, L^{\otimes N})$ is finite-dimensional, therefore $T_N(f)$ can be seen as a matrix, whose size and elements depend on N. In the particular case $M = \mathbb{S}^2 = \mathbb{CP}^1$, the Toeplitz operators associated with the three coordinates x, y, z are, up to a multiplicative constant, the three spin operators S_x, S_y, S_z with total spin $S = \frac{N}{2}$. As the spin goes to infinity, the semiclassical parameter N^{-1} goes to zero.

Toeplitz and Weyl quantization are microlocally equivalent, with non-zero subprincipal corrections (terms of order $\hbar$). The Fourier-Bros-Iagolnitzer (FBI) transform, which allows one to see in phase space the action of pseudodifferential operators, is one formulation of this equivalence between Toeplitz and Weyl calculus in the case $M = \mathbb{C}^n = T^*\mathbb{R}^n$. Toeplitz operators are widely used as ancillary problems for questions in semiclassical analysis. Indeed, Toeplitz operators enjoy the following positivity property which make them especially helpful:

$$f \geq 0 \Rightarrow T_N(f) \geq 0.$$

As already discussed, Toeplitz operators also include spin systems as important examples. In particular, the study of Toeplitz quantization allows one to *understand the large spin limit as a semiclassical limit*, a physical interpretation which is one of the main motivations for the work exposed in this thesis.

Toeplitz quantization extends to more general situations than quantizable Kähler manifolds, such as almost Kähler geometry [BG81], spin^c-Dirac quantization [Ver96; BU96; MM02] or Bochner Laplacians [GU88].

Before describing our contributions we make two remarks about terminology.

- There is an alternative definition of the objects in Toeplitz quantization, where instead of sections of a power of L one considers equivariant functions on the dual line bundle L^* (see Subsection 2.2.3). The equivalent of the Bergman projector is known as the Szegő projector. The two formulations are equivalent, so that we will state results about Szegő projectors or Bergman projectors, depending on the point of view used in the work we refer to.

- The name "Toeplitz operators" also refers to generalisations of Toeplitz matrices (which have constant terms along diagonals). Such operators are not related to spin systems.

1.3 Contributions

In this section we explain our main contributions and relate them to previous results. Our contributions are highlighted in the body of this section, by a line on the left, in the following manner:

> We prove that...

Let us first give a list of short descriptions for our main theorems and the pages where their statements can be found.

List of theorems

1.3.1 Szegő or Bergman kernel asymptotics

Estimates on Toeplitz operators rely on a careful study of the Szegő (or Bergman) kernel. We developed the asymptotic analysis of the Szegő projectors, both in the C^∞ setting on almost Kähler manifolds, and in the analytic setting on Kähler manifolds. In the C^∞ setting we improved the known off-diagnal rate of decay: previously known estimates [MM07] were, for all x and y close, in a local chart:

$$\left\| S_N(x,y) - \frac{N^n}{\pi^n} e^{-\frac{N}{2}|x-y|^2 + iN\Im(x\cdot\overline{y})} \left(1 + \sum_{j=1}^{K} N^{-j/2} b_j(\sqrt{N}x, \sqrt{N}y)\right) \right\| \leq$$
$$CN^{d-(K+1)/2}\Big(1 + |\sqrt{N}x| + |\sqrt{N}y|\Big)^m e^{-C'\sqrt{N}|x-y|} + O(N^{-\infty}).$$

Here $\Im$ stands for the imaginary part, n is the (complex) dimension of the manifold and the b_j's are polynomials.

In the Kähler setting [Cha03], one can replace $e^{-C'\sqrt{N}|x-y|}$ with $e^{-C'N|x-y|^2}$ which decays faster outside the diagonal.

> We proved the same improvement in the almost Kähler setting (see [Del16] and Proposition 3.2.4 as well as Section 3.4 of this thesis), following the shrinking scale expansions performed in [SZ02].

These estimates are useful as long as the $O(N^{-\infty})$ factor is smaller than the exponential error; using the formula above, the controlled region is:

$$\left\{ \operatorname{dist}(x,y) = o\left(\frac{1}{\sqrt{N}\log(N)}\right) \right\},$$

whereas if one can replace $e^{-C'\sqrt{N}|x-y|}$ with $e^{-C'N|x-y|^2}$, it is:

$$\left\{ \operatorname{dist}(x,y) = o\left(\frac{1}{\sqrt{N\log(N)}}\right) \right\}.$$

The results above rely on an elaborate microlocal calculus, and in particular the study of Fourier Integral Operators with complex-valued phase functions [MS75].

A particular case of great interest consists in Kähler manifolds with constant sectional curvature, such as $\mathbb{CP}^1$, or products of them, such as the phase space of spin systems. For this constant curvautre case, an exponential control was hinted in [Chr13] and fully proved in [HLX17], using advanced analytic microlocal calculus.

We obtained, in this case, an elementary proof for the exponential control of the Bergman kernel (see Theorem 6.1). We obtain directly

$$S_N(x,y) = a(N)\Psi^{\otimes N}(x,\overline{y})\mathbb{1}_{\mathrm{dist}(x,y)<r} + O(e^{-cN}).$$

Here a is a polynomial of degree n and Ψ is a section of $L \boxtimes \overline{L}$ in a neighbourhood of the diagonal, whose norm reaches a non-degenerate maximum on the diagonal.

In the general case of a Kähler manifold with real-analytic regularity, we developed a new, adapted symbolic calculus (see Section 7.2) in order to obtain exponential control of the Bergman kernel. It was previously known [HLX17] that

$$S_N(x,y) = \Psi^N(x,\overline{y}) \sum_{k=0}^{c\sqrt{N}} N^{n-k} a_k(x,\overline{y}) + O(e^{-c'\sqrt{N}}),$$

where there exists C, R such that, for all $k \geq 0$,

$$\sup(a_k) \leq CR^k (k!)^2.$$

We improved these results by proving (Theorem 8.1) that the Bergman kernel is known up to an exponentially small error on analytic Kähler manifolds:

$$S_N(x,y) = \Psi^N(x,\overline{y}) \sum_{k=0}^{cN} N^{n-k} a_k(x,\overline{y}) + O(e^{-c'N}),$$

with

$$\sup(|a_k|) \leq CR^k k!.$$

The proof uses our new classes of analytic symbols, which extend the usual ones [Sjö82]. For some real parameters $r > 0, m$, we say that a function on a smooth open set U of $\mathbb{R}^d$ belongs to the space $H(m,r,U)$ when there exists $C > 0$ such that, for every $j \geq 0$, one has

$$\|u\|_{C^j(U)} \leq C \frac{r^j j!}{(j+1)^m}.$$

The minimal C such that the control above is true is a Banach norm for the space $H(m,r,U)$. Such functions are real-analytic. Reciprocally, for all $V \subset\subset U$, every real-analytic function on U belongs to $H(m,r,V)$ for some m, r.

Generalising this notion leads to the definition of *analytic (formal) symbols* (see Definition 7.2.3): for some real parameters $r > 0, R > 0, m$, a sequence of functions $(u_k)_{k\geq 0}$ on U belongs to the space $S_m^{r,R}(U)$ when there exists $C > 0$ such that, for every $j \geq 0, k \geq 0$, one has

$$\|u_k\|_{C^j(U)} \leq C\frac{r^j R^k (j+k)!}{(j+k+1)^m}.$$

Again, the smallest such C defines a norm on $S_m^{r,R}(U)$.

These analytic classes, defined and studied in Chapter 7 are well-behaved with respect to standard manipulations of functions (multiplication, change of variables, ...) and, most importantly, with respect to the stationary phase lemma. Another important property is the summation of such symbols: if $\hbar$ is a small parameter (here $\hbar = N^{-1}$), then for $c > 0$ small depending on R, the sum

$$\sum_{k=0}^{c\hbar^{-1}} \hbar^k u_k$$

is uniformly bounded as $\hbar \to 0$; in this sum, terms of order $k\hbar^{-1}$ are exponentially small, so that the precise choice of c has an exponentially small influence on the sum. This summation property, together with the stationary phase lemma, allows us to study Toeplitz operators up to an exponentially small error.

Similar ideas appear in the literature, and have been successfully applied to the theory of pseudodifferential operators with real-analytic or Gevrey symbols. Early results [BK67] use a special case of our analytic classes, when $m = 0$; from there, a more geometrical theory of analytic Fourier Integral Operators was developed [Sjö82], allowing one to gradually forget about the parameters r and R. It is surprising that the introduction of the parameter m, which mimics the definition of the Hardy spaces on the unit ball, was never considered, although it simplifies the manipulation of analytic functions (the space $H(m, r, U)$ is stable by product if and only if $m \geq 3$). At several places in Part II of this manuscript, it is crucial that we are able to choose m arbitrary large.

An exponential error is optimal in this context, up to the choice of the constant c'.

A recent and independent work [RSN18] establishes this result using the calculus of analytic Fourier Integral Operators.

1.3.2 Concentration of eigenfunctions with low energy

Let us return to the smooth case. In Toeplitz quantization an easy lower bound on Toeplitz operators is

$$T_N(f) \geq \min(f).$$

Improving this bound in the spirit of Melin's inequality [Mel71] allowed us to prove quantum selection for Toeplitz operators.

We defined, for a smooth function f on a compact manifold M, a characteristic function μ defined on the minimal set of f, which is Hölder-continuous and takes non-negative values (see Definition 5.1.1). The value of this function μ at

a given point only depends on the Hessian of f at the considered point, and on the Kähler structure on M. We then proved (Proposition 5.2.4) that, if $f \geq 0$ is smooth, then

$$\left|\min \mathrm{Sp}(T_N(f)) - \min(f) + N^{-1} \min(\mu)\right| = O(N^{-1}).$$

This global estimate, and its local versions, lead to a result of quantum selection (Theorem 5.1): any small energy eigenfunction of a Toeplitz operators localises, up to $O(N^{-\infty})$ precision, on

$$\{x \in M, h(x) \text{ is minimal}, \mu(x) \text{ is minimal}\}.$$

Here we say that a sequence $(u_N)_{N\in\mathbb{N}}$ of normalised sections of $L^{\otimes N}$ localises on a closed set $Z \subset M$ if, for any open set V at positive distance from Z, one has

$$\int_{m\in V} \|u_N(m)\|_L^2 \mathrm{dVol}(m) = O_V(N^{-\infty}).$$

This notion corresponds to microlocalisation in pseudodifferential calculus.

In three particular cases, we obtained a complete expansion of the first eigenvalue and eigenvector in decreasing powers of N, as well as asymptotics for the number of small eigenvalues with multiplicity.

- The first of these cases is the bottom of a non-degenerate well (Theorems 4.1 and 4.2), extending part of the results of [LF14a] in several dimensions, without assuming integrability of the classical system.
- The second case (Theorem 5.2) is in the spirit of "miniwells" [HS86a], where f is minimal along an isotropic submanifold along which μ reaches a non-degenerate minimum at only one point.
- The third case, a "crossing point" (Theorem 5.3), consists in a symbol which is minimal on the union of two isotropic submanifolds with transverse and isotropic intersection (see Definition 5.5.1 for details). To our knowledge, this case was never treated for pseudodifferential operators or even Schrödinger operators (but our results apply in particular to pseudo-differential operators with reasonable symbols). Nevertheless, it was known that the operator $-\Delta + x^2y^2$ has compact resolvent on $L^2(\mathbb{R}^2)$, a fact linked with quantum selection.

One can then compare the Weyl laws for the miniwell case and the crossing point case (Theorem 5.4).

1. If near a point where μ is minimal the principal symbol reaches its minimum in a Morse-Bott way on an isotropic submanifold of dimension r, the number of corresponding eigenvalues in

$$[\min \sigma(T_N(f)), \min \sigma(T_N(f)) + N^{-1}\Lambda_N]$$

is of order $(N^{\frac{1}{2}}\Lambda_N)^r$, in the range $N^{-\frac{1}{2}+\epsilon} \leq \Lambda_N \leq \epsilon$.

2. If near a point where μ is minimal, the conditions of Theorem 5.3 apply, the number of corresponding eigenvalues in

$$[\min \sigma(T_N(f)), \min \sigma(T_N(f)) + N^{-1}\Lambda_N]$$

is of order $(N^{\frac{1}{3}}\Lambda_N)^{\frac{3r}{2}} \log(N^{\frac{1}{3}}\Lambda_N)$, in the range $N^{-\frac{1}{3}+\epsilon} \leq \Lambda_N \leq \epsilon$.

In particular, depending on the relative size of Λ_N and a negative power of $\log(N)$, there are more eigenvalues associated with a miniwell or with a crossing point in the considered spectral window.

The function μ is hard to compute for actual problems as it depends on the spectrum of a non-self-adjoint matrix whose dimension is the number of particles. Quantum selection is of particular interest in frustrated antiferromagnetic spin systems, such as on the Kagome lattice, where the classical minimal set is a stratified manifold and the characteristic value μ varies along this manifold. Our general result on quantum selection holds in this context; it remains to determine on which points μ is minimal. A common conjecture in the physics literature states that μ should be minimal on a discrete subset of coplanar configurations, thus effectively mapping the quantum antiferromagnetic problem, in the large spin limit, into a three-colour Potts model, whose energy is unknown so far.

We also developed some numerical analysis, which we present in Appendix A.2. Given a classical configuration in a finite spin system, we can compute the numerical value of μ.

The constrained minimisation procedure seems to indicate that planar configurations are global minima, but is too numerically unstable to be considered as unchallenged numerical evidence.

The results above establish quantum selection for spin systems as predicted in [DS98]. However, the function μ differs from the selection criterion on the Weyl side.

In the specific case of spin systems on a product of spheres, we wrote down explicitly the rules for the computation of the function μ (Appendix A.1, see also [Del18a]), in order to disseminate our results to the physics community.

1.3.3 Calculus of Toeplitz operators with analytic regularity

Using the analytic techniques developed for the study of the Bergman kernel in the case of a Kähler manifold with real-analytic regularity, we proved a composition and inversion law (Theorem 8.2) for covariant Toeplitz operators associated with elements of our analytic symbol classes $S_m^{r,R}$. If $f \in S_m^{r,R}$ and $g \in S_m^{2r,2R}$ then there exists $f\sharp g \in S_m^{2r,2R}$, with $\|f\sharp g\|_{S_m^{2r,2R}} \leq C\|f\|_{S_m^{r,R}}\|g\|_{S_m^{2r,2R}}$, such that

$$T_N^{cov}(f)T_N^{cov}(g) = T_N^{cov}(f\sharp g) + O(e^{-c'N}).$$

One can also invert operators with non-vanishing principal symbols with a control in the analytic symbol spaces.

Contravariant and covariant operator classes are not equivalent, but one can pass from one to the other up to a loss of regularity.

This result on composition and inversion of analytic Toeplitz operators yields a general result of exponential localisation (Theorem 8.3): given a real-valued analytic function f on an analytic compact quantizable Kähler manifold, if $(u_N)_{N\geq 0}$ is a sequence of normalised eigenfunctions of $T_N(f)$ with associated eigenvalues $\lambda_N = E + O(1)$, then for any open set V at positive distance from $\{f = E\}$ there exists $c > 0$ such that

$$\int_V \|u_N\|_L^2 \mathrm{d}Vol = O(e^{-cN}).$$

In the particular case of a symbol with a local non-degenerate minimum, we performed a Wentzel-Kramers-Brillouin (WKB) expansion for an approximate local ground state, up to an exponentially small error (Theorem 9.1).

Remark 1.3.1 (Gevrey case)**.** The methods developed in Section 7.2 and used in Chapter 8 in the real-analytic setting could be applied to the Gevrey case. s-Gevrey symbol classes can be constructed by a modification of Definition 7.2.3 (more precisely, by replacing the factorial term by itself power s). s-Gevrey functions have almost holomorphic extensions with controlled error near the real locus, so that all results of Part II should be valid in the Gevrey case under the two following modifications:

- The summation of s-Gevrey symbols is performed up to $k = cN^{\frac{1}{s}}$.
- All $O(e^{-c'N})$ controls are replaced with $O(e^{-c'N^{\frac{1}{s}}})$.

For instance, we conjecture that the Bergman kernel on a quantizable compact s-Gevrey Kähler manifold is determined up to $O(e^{-c'N^{\frac{1}{s}}})$ by a s-Gevrey symbol. Its kernel decays at speed $N^{\dim(M)}e^{-(\frac{1}{2}-)N\,\mathrm{dist}(x,y)^2}$ as long as $\mathrm{dist}(x,y) \leq cN^{-\frac{s-1}{2s}}$. This would improve recent results [HX18].

1.4 Discussion

The aim of this project was to examine the concentration properties of low-energy states of spin systems, in the semiclassical limit. Introducing the Toeplitz framework in this setting allowed us to give a precise and general meaning to this problem, to relate it to "usual" semiclassical analysis and, eventually, to reach results in a variety of cases which broadens the knowledge of pseudodifferential operators as well as spin systems.

We preferred to deal directly with Toeplitz operators instead of relying on microlocal equivalences with pseudodifferential calculus, for the following reasons.

1. The various technical claims, and positivity estimates in particular, are usually much easier to state and to prove via Toeplitz quantization than in the Weyl case, at least if the underlying geometrical data (Szegő or Bergman kernel) if known beforehand.

2. Toeplitz quantization is well-defined at the global level for any Kähler manifold, and the additional technicalities which appear when gluing local charts are a hindrance (especially when considering sub-principal effects).

3. The computation of subprincipal terms while dealing with quantization equivalences and quantum maps is tedious, and we preferred comparing subprincipal estimates on both sides to recover it.

4. The asymptotic analysis of the Szegő or Bergman kernel, which must be performed before-hand, is only a few steps away from functional properties of Toeplitz operators, as illustrated by [Cha03] in the smooth case and by our article [Del18c] in the real-analytic case.

5. These kernel asymptotics, which we contributed to make more precise, have crucial applications outside the scope of Toeplitz or pseudodifferential operators, which further motivate their study: properties of projective embeddings of complex manifolds [Tia90; Cat99; Zel00] and, more generally, algebraic geometry of positive line bundles [RS16], Kähler-Einstein metrics [Wan+06; Tsu10], random normal matrices [Kle14], determinantal processes [PV05; Hou+06; Ber08], sampling theory [BB08; BBN11; LO12; DMN15], nodal sets [SZ99; PV05; SZ08; ZZ10; Zel13], and quantum gravity [FKZ12].

Using kernel asymptotics that were known beforehand as well as new ones, we discussed the localisation of low-energy states of a Toeplitz operator on a fixed, finite-dimensional manifold, in the semiclassical limit. In terms of spin systems, this corresponds to fixed finite size spin systems in the large spin limit. We addressed the specific situations of a classical energy which is minimal, either on a finite set of points in a non-degenerate way, or on an (isotropic) submanifold, or on a union of two submanifolds with transverse intersections, and we also gave more general results, which apply for instance on frustrated antiferromagnetic spin systems, where the classical minimal set is a stratified manifold of high complexity.

While our results give some insight into the case when the number of sites grows along with the spin at each site, they do not extend directly to this case. More importantly, in experimental realisations the spin cannot be reasonably thought as very large, as it is rarely greater than $\frac{10}{2}$. In the limit of a large number of particles,

this large spin limit can be physically justified, either by renormalisation processes (grouping a set of spins and replacing them by a unique, larger spin), or by "phase transition" arguments. In all cases, the interactions between semiclassical limit and thermodynamics of spin systems need mathematical investigation and the Toeplitz framework might allow one to treat these problems.

In Chapter 10 we give a few perspectives about Toeplitz quantization in the semiclassical limit, and more specifically spin systems. Low-energy effective dynamics (a generalisation of [RN15; Hel+16]), as well as the limit of a large number of spins (see [HS92] for the Schrödinger case), are discussed. A less direct perspective is to generalise the tools which we developed to other settings where some quantum states behave as coherent states under some limit, which allows one to define an abstract coherent state quantization scheme, with applications to spin systems in the fixed total spin, large number of sites limit, as well as Bose-Einstein condensates.

Our results in real-analyric regularity give hope towards proving exponential decay in more subtle contexts, such as in the presence of subprincipal energy barriers (a WKB analysis for Schrödinger operators was performed in the miniwell case in [HS86a]). The various constants which appear in our setting are not sharp, and optimal constants in a given context require a particular study of the underlying geometry, as illustrated by our study of the Hamilton-Jacobi equation in the case of a non-degenerate well.

1.5 How to read this thesis

Chapter 2 contains a complete introduction to Toeplitz quantization, without requiring prior knowledge on semiclassical analysis or advanced complex geometry.

The body of this thesis is then organised in two parts. Part I (Chapters 3, 4 and 5) contains our results in the setting of C^∞ manifolds and functions. It corresponds to our articles [Del16; Del17].

The transition to Part II is Chapter 6, where we give an elementary proof of an asymptotic formula with exponentially small remainder for the Bergman kernel on manifolds with constant scalar curvature. This chapter is published in [Del18b].

We treat the real-analytic case in Part II (Chapters 7, 8 and 9); this part corresponds to [Del18c; Del19].

In Chapter 10 we give a few perspectives about Toeplitz quantization in the context of spin systems.

In the Appendix, we discuss specific applications to spin systems. We first present Toeplitz quantization and our contrbutions in the vocabulary of modern condensed matter physics, corresponding to the article [Del18a], then we present some numerical work concerning quantum selection on spin systems.

2 TOEPLITZ OPERATORS

Toeplitz operators are a generalisation of the Bargmann-Fock point of view on the quantum harmonic oscillator [Bar61]. They realise a *quantization* on some symplectic manifolds, and are a particular case of geometric quantization [Kos70; Sou67]. Another particular case of geometric quantization is Weyl quantization which leads to pseudodifferential operators. Toeplitz operators were first studied from a microlocal point of view [BG81; BS75], and the study of the Szegő projector (through which Toeplitz operators are defined) was further motivated by geometrical applications [Dem91; Zel00]. Here we directly use the semiclassical point of view developed in [SZ02; Cha03; MM07].

In this chapter we recall the basic properties of Toeplitz operators, and we refer to earlier work on the topic [BBS08; MM07; Cha03; SZ02; Woo97; Bar61] for the proofs of the exposed facts.

2.1 Quantum mechanics and Bargmann spaces

2.1.1 Quantization and semiclassical analysis

Quantum mechanics as a physics theory emerged during the first half of the 20th century, following more and more accurate observations which showed that classical mechanics were not suited to the study of phenomena at atomic scale. Though quantum theory is not self-sufficient as it does not provide an explanation for the various constants which appear in the computations (such as the relative masses of the different elementary particles), this model is still, at this date, unchallenged in the description of the microscopic world.

As in classical mechanics, quantum objects are elements of a configuration space, which move around following an exact and time-reversible evolution. This configuration space can be probed using *observables*. The observation procedure is more involved in quantum mechanics than in classical mechanics, but is characterised by a real number: the expected value of the outcome (the outcome is a probabilistic event in the simplest models). For closed systems, whether quantum or classical, an observable of particular interest is the total energy, which is preserved by the time evolution. Indeed, the time evolution itself is determined only by the energy and the geometry of the configuration space.

To make the parallel between quantum and classical mechanics more apparent, let us compare the Hamiltonian formulation of classical mechanics with the simplest models of quantum mechanics (which involve neither quantum fields nor an infinite number of particles), which is the framework of this thesis.

In Hamiltonian (finite-dimensional) mechanics, the configuration space is a symplectic manifold (M, ω). The symplectic structure ω encodes relations between parameters on M and allows to define the *symplectic gradient* of a function, which is orthogonal to the usual gradient (when the latter can be defined).

The canonical example is the even-dimensional space $M = \mathbb{R}^{2n}$ endowed with the standard two-form

$$\omega_{st} = \sum_{i=1}^{n} \mathrm{d}p_i \wedge \mathrm{d}q_i.$$

It is the set of configurations for the movement of a point in flat space: the variables q_i represent the position in coordinates, and the variables p_i represent the speed, or more accurately the momentum, in coordinates. Locally, on every symplectic manifold (M, ω), there is a choice of local coordinates in which ω takes the previous form.

In quantum mechanics the configuration space is a Hilbert space $\mathcal{H}$. At this point we already stress that quantum mechanics, contrary to classical mechanics, are not scale-invariant: indeed quantum effects are rarely observed at the length- and energy-scales of everyday's life, while they must be taken into account in the movement of an electron or the low-temperature state of a material. Thus all quantum data (including the configuration space) depend on a scale constant, which we call $\hbar$. We thus write specifically $\mathcal{H}_\hbar$.

The quantum configuration space which is perhaps the most known is $L^2(\mathbb{R}^n, \mathbb{C})$. It does not depend on $\hbar$, and it is the simplest model for the motion of a quantum particle in $\mathbb{R}^n$.

Observables in classical mechanics are usually real-valued functions on M. The observation process is as follows: if the system is found at point $x \in M$, then the machine which measures the observable a will return $a(x)$. The quantum situation is more involved: observables are essentially self-adjoint operators on $\mathcal{H}_\hbar$. The measurement of an observable $A_\hbar$ may return any element in the spectrum of $A_\hbar$, and will change the quantum state $\psi \in \mathcal{H}_\hbar$ under observation, following a probabilistic event which depends on $A_\hbar$ and ψ. However this process is characterised by the expectations of the returned values of observables, which in this case is $\langle \psi, A_\hbar \psi \rangle_\hbar$.

An observable of great interest is the total energy of the system. If the classical system has energy $h \in C^\infty(M, \mathbb{R})$, then the time evolution is given by h and the symplectic form ω: it is the flow of the symplectic gradient of h. This flow preserves both h and ω. In the case $(M, \omega) = (\mathbb{R}^{2n}, \omega_{st})$, if h is the sum of a kinetic energy and a potential energy, $h(p, q) = \frac{1}{2}|p|^2 + V(q)$, then the symplectic gradient of h is $(-\overrightarrow{\nabla} V(q), p)$, so that the equation for the time evolution corresponds to Newton's second law:

$$\begin{aligned} \partial_t q(t) &= p(t) \\ \partial_t p(t) &= -\overrightarrow{\nabla} V(q(t)). \end{aligned}$$

If a is another observable on M, the time evolution of the measure of a is given by the Poisson bracket:

$$\partial_t a(x(t)) = \{a, h\}(x(t)).$$

In quantum mechanics, if the energy is a self-adjoint operator $H_\hbar$, then the equation of the time evolution is

$$i\hbar \partial_t \psi(t) = H_\hbar \psi(t),$$

which can be solved in a more or less explicit way:

$$\psi(t) = \exp\left(\frac{-itH_\hbar}{\hbar}\right)\psi(0).$$

A study of the spectrum of $H_\hbar$ then allows us to understand the quantum time evolution. In particular, eigenfunctions of $H_\hbar$ are fixed points of this evolution up to an oscillating phase.

The self-adjoint operator on $L^2(\mathbb{R}^n)$ which corresponds to the movement of a particle subject to a potential V is

$$H_\hbar = -\hbar^2\Delta + V.$$

This is the famous Schrödinger operator, and the time evolution is called the Schrödinger equation in this case.

The time evolution of the expected value for another observable $A_\hbar$ is then:

$$\frac{\mathrm{d}}{\mathrm{d}t}\langle\psi, A_\hbar\psi\rangle = \langle\psi, \frac{i}{\hbar}[A_\hbar, H_\hbar], \psi\rangle.$$

In the classical case the time evolution of observables was given by the Poisson bracket; in the quantum case it is given by the commutator of the two operators. This remark is fundamental in the process of *quantization*: given a classical model, how can one construct an associated quantum model? The answer lies in the correspondence between the Poisson bracket of classical observables and the Lie bracket of quantum observables, which should coincide up to a small (of order $\hbar$) correction. In the case $(M, \omega) = (\mathbb{R}^{2n}, \omega_{st})$, a formal solution consists in replacing every occurence of p by $-i\hbar\overrightarrow{\nabla}$, since

$$\frac{i}{\hbar}[-i\hbar\partial_j, q_k] = \delta_{jk} = \{p_j, q_k\}.$$

In particular, the function $p \mapsto |p|^2$ is mapped into $-\hbar^2\Delta$, which yields the Schrödinger operator.

Making the change $p \rightsquigarrow -i\hbar\overrightarrow{\nabla}$ rigorous leads to Weyl quantization and $\hbar$ pseudodifferential operators, which is a well-established theory, used in many different contexts where the link with quantum physics might not be obvious. Pseudodifferential operators are an essential tool of the modern theory of PDEs.

Other quantization procedures are used; a general concept of *geometric quantization* emerged in the late 1960's [Sou67; Kos70] with two applications in mind: quantum physics and representation theory. This chapter is devoted to the introduction of *Berezin-Toeplitz quantization*, which associates to a real function f on a Kähler manifold a self-adjoint operator $T_N(f)$. The topic of this thesis is the study of the spectrum of $T_N(f)$.

2.1.2 The Bargmann space

In quantum as in classical physics, the harmonic oscillator (and its generalisations) is a very important example. Fock observed that the traditional representation shown above (with Hilbert space $L^2(\mathbb{R}^n)$) was not the best suited to the deep understanding of the quantum harmonic oscillator. Indeed, the classical harmonic oscillator $h(p, q) = p^2 + q^2$ on $\mathbb{R}^2$ is left invariant by a rotation around the origin, but its Weyl quantization $-\hbar^2\Delta + q^2$ assigns a totally different role to p and q and breaks this symmetry. From the observation that $h(p, q) = (p - iq)(p + iq)$, a representation of quantum space by holomorphic functions was seen to be more adapted.

Definition 2.1.1. Let $N > 0$. The Bargmann space is defined as follows:

$$B_N(\mathbb{C}) = \Big\{ u \in L^2(\mathbb{C}), z \mapsto e^{\frac{N}{2}|z|^2} u(z) \text{ is holomorphic} \Big\}.$$

It inherits a Hilbert space structure from $L^2(\mathbb{C})$.

The dependence on N of the Bargmann space might seem artificial at this stage: the change of variables $z \mapsto \sqrt{N} z$ sends B_N to B_1.

Examples of functions in $B_N(\mathbb{C})$, which in fact form a Hilbert base, consist in the renormalised monomials, indexed by $k \in \mathbb{N}_0$:

$$e_k : z \mapsto \frac{N^{n+\frac{k}{2}}}{\pi^n \sqrt{k!}} e^{-\frac{N}{2}|z|^2} z^k.$$

A natural unbounded operator on $B_N(\mathbb{C})$ is $u \mapsto zu$, which has dense domain (since it is well-defined for all elements of the Hilbert basis). It is not essentially self-adjoint; its adjoint is $u \mapsto N^{-1}\partial u + zu$.

We are now in position to define the quantum harmonic oscillator: we first apply z, then its adjoint. With the classical expression $h(p,q) = (p - iq)(p + iq)$ in mind, the holomorphic coordinate $p + iq = z$ has the same role in this quantization than q in Weyl quantization: it is quantized into a multiplication operator, while the remaining coordinate is quantized into a degree 1 differential operator.

The quantum harmonic oscillator has compact resolvent; its eigenfunctions are the e_k's, and the corresponding eigenvalue is $N^{-1}(k+1)$.

Would we have chosen the other order of composition in the definition of the quantum harmonic oscillator, the eigenfunctions would have been the same but the eigenvalues would be $\{N^{-1}k, k \in \mathbb{N}_0\}$. Weyl quantization somehow consists in an intermediate solution since the eigenvalues of its quantum harmonic oscillator are $\hbar(k + \frac{1}{2})$.

The reader familiar with the spectral study of the Weyl harmonic oscillator, whose eigenfunctions are given by Hermite polynomials, will find that the eigenfunctions in the Fock representations are much simpler since they are monomials. The correspondence between the two versions of the quantum harmonic oscillator leads to a unitary transform between B_N and $L^2(\mathbb{R})$:

Definition 2.1.2. The Bargmann transform $\mathcal{B}_N$ is the unitary transform from $B_N(\mathbb{C})$ to $L^2(\mathbb{R})$ with kernel

$$\mathcal{B}_N(z,x) = \exp\Big(-\frac{N}{2}(|z|^2 + z^2 - 2\sqrt{2}xz + x^2) \Big).$$

Then the equivalence reads

$$\mathcal{B}_N^{-1}(z^* z)\mathcal{B}_N = -N^{-2}\Delta + |q|^2 + \frac{1}{2}.$$

2.1.3 Toeplitz quantization

The Toeplitz quantization on the Bargmann space consists in a generalisation of the harmonic oscillator above.

Since B_N is a closed subspace of $L^2(\mathbb{C})$, there is an associated orthogonal projector $\Pi_N : L^2(\mathbb{C}) \mapsto B_N$. This projector has a kernel given by the Hilbert basis $(e_k)_{k\geq 0}$ of B_N:

$$\Pi_N(x,y) = \sum_{k=0}^{+\infty} e_k(x)\overline{e_k(y)} = \left(\frac{N}{\pi}\right)^n \exp\left(-\frac{N}{2}|x-y|^2 + iN\Im(x\cdot\overline{y})\right). \tag{1}$$

Let us return to the quantum harmonic oscillator. Observe, that for any element e_k of the natural Hilbert basis, the function $z \mapsto |z|^2 e_k(z)$, as an element of $L^2(\mathbb{C})$, is orthogonal to any e_j for $j \neq k$, since

$$\int_{\mathbb{C}} \overline{e_j(z)}|z|^2 e_k(z)\mathrm{d}z\mathrm{d}\overline{z} = c_j c_k \int_0^{+\infty} e^{-Nr^2} r^{j+k+1}\mathrm{d}r \int_{\mathbb{S}^1} e^{i(k-j)\theta}\mathrm{d}\theta = 0.$$

Thus, $|z|^2 e_k$ can be written $\lambda_k e_k + v$ with $v \in B_N^{\perp}$. One can compute

$$\lambda_k = \int_{\mathbb{C}} |z|^2 |e_k(z)|^2 \mathrm{d}z\mathrm{d}\overline{z} = \frac{N^{2n+k}}{\pi^n k!}\int_{\mathbb{C}} e^{-N|z|^2}|z|^{2k+2}\mathrm{d}z\mathrm{d}\overline{z} = N^{-1}(k+1),$$

which corresponds exactly to the eigenvalue associated with e_k for the quantum harmonic oscillator. In other terms, by linearity, the quantum harmonic oscillator is

$$u \mapsto \Pi_N(|z|^2 u).$$

We are now in position to make a more general definition:

Definition 2.1.3. Let $f \in C^\infty(\mathbb{C},\mathbb{C})$ be a function with polynomial growth near infinity.

The Toeplitz operator associated to f is, for $N > 0$, the unbounded operator $T_N(f) = \Pi_N f$ on $B_N(\mathbb{C})$. The function f is called the *symbol* of $T_N(f)$.

Definitions 2.1.1 and 2.1.3 readily adapt to the multi-dimensional case. Toeplitz operators on $\mathbb{C}^n$ whose symbols are semipositive definite quadratic forms generalise the harmonic oscillator. They play a crucial role in Part I of this thesis, which is devoted to subprincipal effects (that is, effects of order N^{-1}) for Toeplitz operators.

If Q is a quadratic form on $\mathbb{R}^{2n}$ identified with $\mathbb{C}^n$, then $T_N(Q)$ is essentially self-adjoint. This operator is related to the Weyl quantization $Op_W^\hbar(Q)$ with semi-classical parameter $\hbar = N^{-1}$. In fact, $T_N(Q)$ is conjugated, via the Bargmann transform $\mathcal{B}_N$ [Bar61], with the operator

$$Op_W^{N^{-1}}(Q) + \frac{N^{-1}}{4}\operatorname{tr}(Q). \tag{2}$$

Here

$$Op_W^\hbar(q_j q_k) = q_j q_k \qquad Op_W^\hbar(p_j p_k) = -\hbar^2\partial_j\partial_k \qquad Op_W^\hbar(p_j q_k) = -\frac{i\hbar}{2}(\partial_j q_k + q_k\partial_j).$$

The trace of the quadratic form Q is defined as the trace of the associated matrix in an orthonormal basis for the standard Euclidian structure of $\mathbb{C}^n$ (we used explicitely this Euclidian structure in the definition of B_N).

See Proposition 4.2.5 for a detailed statement and a proof of (2).

The formula (2) is a particular case of a more general equivalence of quantizations, which is exact in one direction. An explicit computation yields, for any $f \in L^\infty(\mathbb{C})$,

$$\mathcal{B}_N T_N(f) \mathcal{B}_N^* = Op_W^{N^{-1}}\left[f * \left(z \mapsto \frac{N}{\pi} e^{-\frac{|z|^2}{2N}}\right)\right]. \tag{3}$$

This formula can be inverted only up to an error $O(N^{-\infty})$, unless the Weyl symbol is real-analytic.

If Q is semi-definite positive, then it takes non-negative values as a function on $\mathbb{R}^{2n}$, hence $T_N(Q) \geq 0$ for all $N \geq 0$ since, for $u \in B_N$, one has

$$\langle u, \Pi_N Q \Pi_N u\rangle = \langle u, Qu\rangle \geq 0.$$

The infimum of the spectrum of $T_N(Q)$ is of utmost interest, since it leads to the notion of Melin value. As Q is 2-homogeneous, and the Bargmann spaces are identified with each other through a scaling, one has $T_N(Q) \sim N^{-1} T_1(Q)$, and in particular the infimum of the spectrum of $T_N(Q)$ is given by

$$\inf(\mathrm{Sp}(T_N(Q))) = N^{-1} \inf(\mathrm{Sp}(T_1(Q))).$$

Definition 2.1.4. Let Q be a semi-definite positive quadratic form on $\mathbb{R}^{2n}$, identified with $\mathbb{C}^n$.

We denote by $\mu(Q)$ the *Melin value* of Q, defined by

$$\mu(Q) := \inf(\mathrm{Sp}(T_1(Q))).$$

Given $Q \geq 0$, how can one compute $\mu(Q)$? By (2), it depends first on the trace of Q (which is easy to compute), and second on the infimum of the spectrum of $Op_W^1(Q)$. This second part is invariant through a symplectic change of variables, and the problem reduces to a *symplectic diagonalisation* of Q (see Propositions 4.2.4 and 4.2.6). In particular,

Example 2.1.5. *Let $\alpha, \beta \geq 0$. Then*

$$\mu\big((x,y) \mapsto \alpha x^2 + \beta y^2\big) = \frac{1}{4}(2\sqrt{\alpha\beta} + \alpha + \beta).$$

The function μ itself is *not* invariant under symplectomorphisms (for example, in the previous example it does not only depend on $\alpha\beta$). However, it is invariant under unitary changes of variables.

If Q is definite positive, then $T_N(Q)$ has compact resolvent, and the first eigenvalue is simple.

2.2 Kähler manifolds and Szegő kernels

The definition of Weyl quantization, which normally takes place in $\mathbb{R}^{2n}$, can be generalised (up to a choice of charts) to any cotangent space T^*M. This fact allows us to define a quantization on symplectic spaces which have a cotangent structure.

In a similar manner, the Bargmann spaces and the Toeplitz operators of Section 2.1 can be generalised to more general complex manifolds, by making use of the complex structure. The most convenient geometrical data for this Toeplitz quantization is a Kähler structure, which we rapidly present in Subsection 2.2.1.

There are two equivalent point of views on Toeplitz quantization; one is the "sections of line bundles" point of view, which we presented in Chapter 1. The other point of view, using a principal circle bundle, is more suited to an association with the microlocal setting [BS75; BG81]. We present the circle bundle approach in 2.2.3 and sections of line bundles in 2.2.4.

2.2.1 Kähler manifolds

A complex manifold M is endowed with a *complex structure* J which is informally defined as the action of the complex number i on the real tangent space. To be precise, let $U \in M$ a small open set which we identify, through a holomorphic chart ρ, to an open neighbourhood of zero in $\mathbb{C}^n$. Any tangent fibre T_xM for $x \in U$ is identified, through this chart, with a copy of $\mathbb{C}^n$ through the linear isomorphism $\mathrm{d}_x\rho$. Let us define a linear operator J on T_xM to be such that

$$\mathrm{d}_x\rho(J\xi) = i\mathrm{d}_x\rho(\xi).$$

Then J does not depend on ρ, since the differential of any biholomorphism between domains in $\mathbb{C}$ commutes with multiplication by i. This allows us to define a linear automorphism of the fibres $J : TM \mapsto TM$, which enjoys the following property:

$$J^2 = -Id.$$

Local holomorphic functions on M are naturally defined by the requirement of being holomorphic in a chart; but holomorphicity can be expressed in terms of J. Indeed, a function f is holomorphic on an open set $U \in M$ if and only if, for every $\xi \in TU$, one has

$$\partial_\xi f := \mathrm{d}_\xi f - i\mathrm{d}_{J\xi} f = 0.$$

We shall note, however, that not every linear isomorphism $J : TM \mapsto TM$ such that $J^2 = -Id$ comes from a complex structure; these so-called *almost Kähler structures* are discussed in Section 2.5.

The complex structure which allows to identify $\mathbb{R}^{2n}$ with $\mathbb{C}^n$ played a crucial role in Subsection 2.1.2, since the quantum space B_N in this case consists of holomorphic functions. We are interested in an extension of Toeplitz quantization to some symplectic manifolds endowed with an additional complex structure.

Definition 2.2.1. A Kähler manifold M is a complex manifold with a symplectic form (M, ω, J) under the following supplementary conditions:

- ω is J-invariant, that is, for all $\xi, \eta \in TM$ with same base point,

$$\omega(J\eta, J\xi) = \omega(\eta, \xi).$$

- The symmetric bilinear form $\omega(J\cdot,\cdot)$ is definite positive.

Example 2.2.2. *Below are some examples of Kähler manifolds.*

- *The space $\mathbb{C}^n$ endowed with the canonical symplectic form ω_{st} and the complex structure J corresponding to multiplication by i, is a Kähler manifold.*
- *Let Λ be a lattice in $\mathbb{C}^n$, then the quotient torus $\mathbb{C}^n/\Lambda$ is a Kähler manifold.*
- *The complex projective space $\mathbb{CP}^n$ has a natural Kähler structure associated with the Fubini-Study form. To be more precise, the symplectic form defined in local charts by:*

$$\omega_{[1:z_1:\ldots:z_n]} = \frac{\sum_{k=1}^n \mathrm{d}\Re(z_k)\wedge \mathrm{d}\Im(z_k)}{1+\sum_{i=1}^n |z_i|^2}$$

is invariant under the natural change of charts, and is compatible with the complex structure.

A Kähler manifold has a natural associated Riemannian structure defined by:

$$g(\eta,\xi) = \omega(\eta, J\xi).$$

Let us prove that the relations between J, ω and g allow one to consider convenient infinitesimal bases.

Let $m \in M$ be a point in a Kähler manifold of dimension n and let $e_1,\ldots,e_n$ be a g-orthonormal family of T_mM which spans a Lagrangian subspace of T_mM. For $1 \le k \le n$, let $f_k = Je_k$. Then

$$g(f_j,f_k) = \omega(-e_j,f_k) = \omega(-f_j,-e_k) = g(e_j,e_k)$$

so that $f_1,\ldots,f_n$ is g-orthonormal; moreover

$$g(e_j,f_k) = \omega(-e_j,e_k) = 0,$$

so that $(e_1,\ldots,e_n,f_1,\ldots,f_n)$ is a g-orthonormal basis of T_mM. It also forms a symplectic basis, since

$$\omega(e_j,f_k) = g(e_j,e_k).$$

In particular, in a Kähler manifold, the Liouville measure coincides with the Riemannian volume form. The set of all g-orthonormal and symplectic families at T_mM carries a natural $U(n)$-action.

Complex manifolds have $\mathbb{C}^n$ as universal local model, and in the same way, symplectic manifolds have no local geometry. However Kähler manifolds are not all locally equivalent, since data from the associated Riemannian structure must be preserved. For instance, the complex projective space $\mathbb{CP}^1$, endowed with the Fubini-Study form, is a Kähler manifold of real dimension 2, with constant positive curvature, hence is not locally equivalent to $\mathbb{C}$ as a Kähler manifold: no local diffeomorphism preserves both J and ω.

A convenient way to describe the local geometry of a Kähler manifold consists in Kähler potentials.

Definition 2.2.3. Let U be a contractible open set of $\mathbb{C}^n$ and (ω, J) a Kähler structure on U. Let ∂ denote the Cauchy-Riemann operator associated with J.

A *Kähler potential* on U is a function $\phi \in C^2(U, \mathbb{R})$ such that

$$\frac{i}{2}\partial_\xi \overline{\partial}_\eta \phi = \omega(\xi, \eta).$$

In the situation above a Kähler potential always exists. Kähler potentials are strongly plurisubharmonic (p.s.h) functions (a real-valued function ϕ is p.s.h when the Hermitian matrix $(\partial_j \overline{\partial}_k \phi)_{j,k}$ is definite positive). There is no natural Kähler potential associated with a Kähler structure, but the difference between two Kähler potentials is a harmonic function.

Reciprocally, any strongly p.s.h function defines a symplectic form, which is compatible with J in order to form a Kähler manifold. Thus, strongly p.s.h functions completely characterise the local geometry of Kähler manifolds.

Traditonal semiclassical analysis takes place on the cotangent bundle over a Riemannian manifold X. In the case where X is real-analytic, a neighbourhood of the zero section in T^*X admits a natural Kähler structure[GS91]: the symplectic form is the natural one, X is totally real and the metric restricted on it is the prescribed Riemannian structure, and the metric is flat when restricted to every fibre.

2.2.2 Local construction of quantum states

If a symplectic manifold (phase space) M has a complex structure J, the idea behind Toeplitz operators is to consider quantum states as holomorphic functions. Indeed, from the usual (Weyl) picture, we know that we must drop half of the variables of phase space. Holomorphic functions on a complex manifold of real dimension $2n$ depend only on n variables hence satisfy this requirement. If M is compact, holomorphic functions on M are all constant, so that the quantum space will consist of sections of a convenient line bundle over M or, by duality, holomorphic functions on a dual line bundle.

With Definition 2.1.1 in mind, the introduction of a line bundle corresponds informally to a weight, which is $e^{|z|^2}$ in the Bargmann case. Let us explain this in greater detail.

Let M be a Kähler manifold of dimension n, with symplectic form ω. The essence of Definition 2.2.3 is that it is not possible to find a holomorphic local chart on M for which the symplectic form is pulled to the standard symplectic form on $\mathbb{C}^d$. In order to generalise Definition 2.1.1, while encoding the particular holomorphic structure ω by a Kähler potential ϕ, we wish to consider, on a contractible open set U of M (identified with an open set of $\mathbb{C}^n$), complex-valued functions of the form

$$\Big\{ s \in L^2_\omega(U), e^\phi s \text{ is holomorphic} \Big\}.$$

Here $L^2_\omega(U)$ is the set $L^2(U)$ with scalar product $(u, v) \mapsto \int_U u\overline{v}\frac{\omega^{\wedge n}}{n!}$. It is more convenient to put the weight e^ϕ inside the definition of the L^2 norm: our first draft of a quantum state space becomes

$$\Big\{ s \text{ holomorphic on } U, \int_U |s|^2 e^{-2\phi}\frac{\omega^{\wedge n}}{n!} < +\infty \Big\}.$$

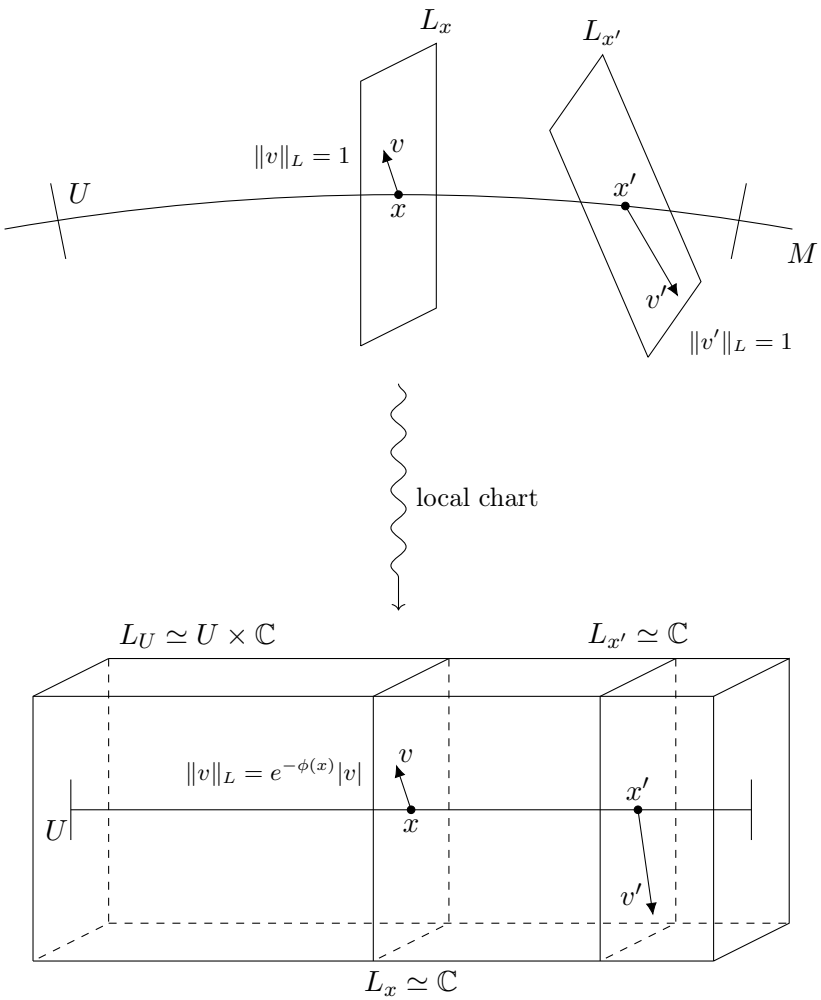

Figure 2: The bundle L

Let us again reformulate, in a way which we will make global: we consider a total space L_U which is $U \times \mathbb{C}$ with a supplementary information: for each $x \in U$, we consider the Hermitian norm on $\mathbb{C} = \{x\} \times \mathbb{C} \subset L_U$ given by $\|v\|_L = e^{-\phi}|v|$. We then view a function s as above as a *section* of L_U, that is, a function from U to $U \times \mathbb{C}$ such that $s(x) \in \{x\} \times \mathbb{C}$ for every $x \in U$. From $\|v\|_L$ one can build an L^2-type norm on such sections, which is the one we already mentioned.

$$\|s\|_{L^2(U,L_U)} = \int_U \|s(x)\|_L^2 \frac{\omega^{\wedge n}}{n!} = \int_U |s(x)|^2 e^{-2\phi(x)} \frac{\omega^{\wedge n}}{n!}.$$

The introduction of the parameter N in Definition 2.1.1 consists in replacing ϕ by $N\phi$; this corresponds to multiplying the curvature ω by N, and to consider the tensor power $L^{\otimes N}$ of L.

Let us pass the discussion above to the global level. Given a covering of M by small open sets $U_1, U_2, \ldots$, one can then try to glue together different pieces $L_{U_1}, L_{U_2}, \ldots$ of the total space above, in a way that the Hermitian norms coincide. This is not always possible: a necessary and sufficient condition is that the integral of ω over every closed, compact surface on M is $2k\pi$ for some $k \in \mathbb{Z}$ (see [Woo97], pp. 158-162). If this condition is satsfied, we will say that M is *quantizable*. Under this condition, the resulting space L is not simply $M \times \mathbb{C}$ with a convenient norm on $\mathbb{C}$, but a *line bundle*[1] (informally speaking, the copy of $\mathbb{C}$ moves with the point on M). A local picture of L is presented in Figure 2.

Yet another reformulation is the following: we associate to the local section s a complex-valued function, again on $U \times \mathbb{C}$ (which we will not interpret as L_U but rather as its dual), of the form

$$(x, \eta) \mapsto s(x)\eta^N.$$

One can restrict this function to $X_U = \{(x, \eta) \in U \times \mathbb{C}, |\eta| = e^{-\phi(x)}\}$, a submanifold which looks like $U \times \mathbb{S}^1$, but the sizes of the circles vary. Then the L^2 norm of this function on X_U is, as before (up to the factor 2π),

$$2\pi \int_U |s(x)|^2 e^{-N\phi(x)} \frac{\omega^{\wedge n}}{n!}.$$

Since X_U has real dimension $2n + 1$, the holomorphicity condition on s translates into the fact that the resulting function on X_U is the boundary value of a holomorphic function on $D_U = \{(x, \eta) \in U \times \mathbb{C}, |\eta| < e^{-\phi(x)}\}$. Observe that, with $\|\eta\|_{L^*} = e^{\phi(x)}|\eta|$, one has $X_U = \{(x, \eta) \in U \times \mathbb{C}, \|\eta\|_{L^*} = 1\}$; that is, X_U naturally sits in the dual space L_U^*.

1 This is a *complex* line bundle so the "line" has real dimension two.

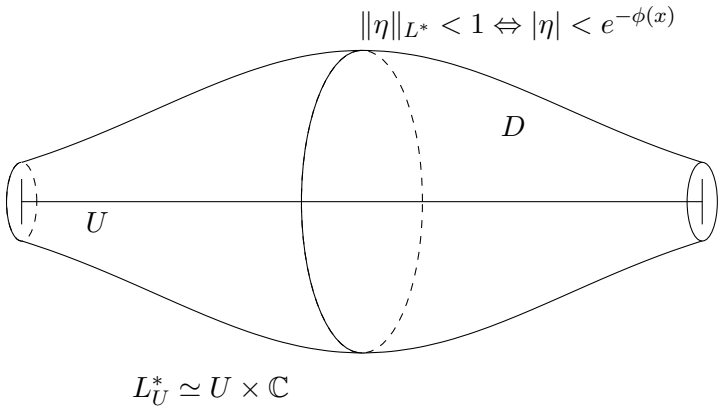

Figure 3: The domain D inside L^*, in a chart

2.2.3 Hardy spaces and the Szegő projector: circle bundle approach

Let M be a compact quantizable Kähler manifold. Let L^* be the dual line bundle of the prequantum line bundle L, with dual Hermitian norm. Let D be the unit ball of L^*, (see Figure 3) that is:

$$\{D = (m, \eta) \in L^*, \|\eta\|_{L^*} < 1\}.$$

The boundary of D is denoted by X. It is a circle bundle over M, with projection π and an $\mathbb{S}^1$ action

$$\begin{aligned} r_\theta : \quad X &\to X \\ (m, \eta) &\mapsto (m, e^{i\theta}\eta). \end{aligned}$$

X inherits a Riemannian structure from L^* so that $L^2(X)$ is well-defined. We are interested in the equivariant Hardy spaces on X, defined as follows:

Definition 2.2.4.

- The *Hardy space* $H(X)$ is the closure in $L^2(X)$ of

$$\{f|_X,\ f \in C^\infty(D \cup X),\ f \text{ holomorphic in } D\}.$$

- The Szegő projector S is the orthogonal projection from $L^2(X)$ onto $H(X)$.
- Let $N \in \mathbb{N}$. The *equivariant Hardy space* $H_N(X)$ is:

$$H_N(X) = \{f \in H(X),\ \forall (x, \theta) \in X \times \mathbb{S}^1,\ f(r_\theta x) = e^{iN\theta} f(x)\}.$$

- The equivariant Szegő projector S_N is the orthogonal projection from $L^2(X)$ onto $H_N(X)$.

Throughout this thesis, we will work with the sequence of spaces $(H_N(X))_{N\in\mathbb{N}}$. If M is compact, then the spaces $H_N(X)$ are finite-dimensional spaces of smooth functions. (Note, however, that this dimension grows polynomially with N.) Hence, the Szegő projector has a Schwartz kernel, that we will also denote by S_N.

Example 2.2.5 (The sphere)**.** *The sphere $\mathbb{S}^2$ has a canonical Kähler structure as $(\mathbb{CP}^1, \omega_{FS})$, which is quantizable. In this case D is the unit ball in $\mathbb{C}^2$, blown up at zero, and $X = \mathbb{S}^3$. One recovers the usual $\mathbb{S}^1$ free action on $\mathbb{S}^3$ with quotient $\mathbb{S}^2$.*

Here, $H_N(X)$ is the space of homogeneous polynomials of two complex variables, of degree N, with Hilbert structure the scalar product of the restriction to X of these polynomials. A natural Hilbert basis corresponds to the normalized monomials

$$(z_1, z_2) \mapsto \sqrt{\frac{N+1}{\pi}\binom{N}{k}} z_1^k z_2^{N-k}.$$

In particular, the Szegő projector has kernel

$$S_N^{\mathbb{CP}_1} : (z, w) \mapsto \frac{N+1}{\pi}(z \cdot \overline{w})^N.$$

Example 2.2.6 ($\mathbb{C}^n$)**.** *Another important example (though non compact) is the case $M = \mathbb{C}^n$, with standard Kähler form. As $\mathbb{C}^n$ is contractile, the bundle L is trivial, but the metric is not. The curvature condition yields:*

$$(L, h) = \left(\mathbb{C}_z^n \times \mathbb{C}_v, e^{|z|^2}|v|^2\right).$$

This leads to the following identification [Bar61]:

$$H_N(X) \simeq B_N := L^2(\mathbb{C}^n) \cap \left\{z \mapsto e^{-\frac{N}{2}|z|^2} f(z),\ f \text{ is an entire function}\right\}.$$

Hence we recover Definition 2.1.1.

As the case $M = \mathbb{C}^n$ is of particular interest, we will keep separate notations for the Szegő kernel in this case, which will always be denoted by Π_N.

Definition 2.2.7. Let M be a Kähler manifold, with equivariant Szegő projectors $(S_N)_{N\geq 1}$. Let $h \in C^\infty(M)$ be a smooth function on M. For all $N \geq 1$, the Toeplitz operator $T_N(h) : H_N(X) \to H_N(X)$ associated with the symbol h is defined as

$$T_N(h) = S_N h.$$

In this work we investigate the spectral properties of the operators $T_N(f)$, for fixed f and $N \to +\infty$.

Example 2.2.8 (Spin operators)**.** *Let us continue from Example 2.2.5. The sphere $\mathbb{S}^2$ is naturally a submanifold of $\mathbb{R}^3$; as such, there are three coordinate functions $(x, y, z) : \mathbb{S}^2 \mapsto \mathbb{R}^3$. They are closed under Poisson brackets: one has $\{x, y\} = z$ and two similar identities by cyclic permutation.*

In the Hilbert basis given by the normalized monomials, the associated Toeplitz operators $T_N(x), T_N(y), T_N(z)$ are, up to a factor $\frac{N}{N+2}$, the usual spin matrices with spin $\frac{N}{2}$.

One can generalise the elementary bound of Bargmann quantization:

Proposition 2.2.9. *Let M be a quantizable Kähler manifold and let $h \in C^\infty(M, \mathbb{R})$. If $h \geq 0$, then for all $N \in \mathbb{N}$ one has $T_N(h) \geq 0$.*

Proof. Let X denote the prequantum circle bundle over M constructed above and h^* the pull-back of h on X. Let $u \in H_N(X)$. Then $S_N u = u$ so that

$$\langle u, T_N(h)u\rangle = \int_X |u|^2 h_* \geq 0$$

as soon as $h \geq 0$. □

2.2.4 Sections of line bundles

We present here an alternative construction of Toeplitz quantization which is more suited to direct approaches for the study of the associated projector [BBS08; HLX17].

Let (M, ω, J) be a quantizable compact manifold. The Hermitian line bundle (L, h) presented in Subsection 2.2.4 can be used to describe the Hardy spaces as spaces of sections, instead of functions on a circle bundle.

Definition 2.2.10. Let $N \in \mathbb{N}$. The space of holomorphic sections of $L^{\otimes N}$ is denoted $H^0(M, L^{\otimes N})$. It is finite-dimensional. The Bergman projector S_N is the orthogonal projector from the space of square-integrable sections $L^2(M, L^{\otimes N})$ to $H^0(M, L^{\otimes N})$.

If $f \in C^\infty(M, \mathbb{C})$, the Toeplitz operator $T_N(f) : H^0(M, L^{\otimes N}) \mapsto H^0(M, L^{\otimes N})$ acts as follows:

$$T_N(f)u = S_N(fu).$$

Before establishing the link between Definition 2.2.10 on one hand, and Definitions 2.2.4, 2.2.7 on the other hand, let us describe explicitly the L^2 structure on the space of sections: from the Hermitian metric h on L, one deduces a Hermitian metric h_N on $L^{\otimes N}$. If u, v are sections of $L^{\otimes N}$, the scalar product is defined as

$$\int_M \langle u(m), v(m)\rangle_{h_N} \mathrm{d}Vol(m).$$

Here $\mathrm{d}Vol$ is the Liouville measure $\omega^{\wedge n}$, which coincides with the volume measure associated with the natural Riemannian metric on M.

Proposition 2.2.11. *Let X be the circle bundle over M as defined in section 2.2.3.*

There is an isometry of Hilbert spaces between $L^2(M, L^{\otimes N})$ and

$$\{u \in L^2(X), \forall(\theta, x) \in \mathbb{S}^1 \times X,\ u(r_\theta \cdot x) = e^{iN\theta}u(x)\}.$$

This isometry sends $H^0(M, L^{\otimes N})$ to the Hardy space $H_N(X)$.

Proof. Let $s \in L^2(M, L^{\otimes N})$. We associate to s the following function on X:

$$\hat{s} : (m, v) \mapsto \langle v^{\otimes N}, s(m)\rangle_{L^{\otimes N *}, L^{\otimes N}}.$$

Then

$$\langle \hat{s}, \hat{t}\rangle_{L^2(X)} = \langle s, t\rangle_{L^2(M, L^{\otimes N})},$$

and moreover $\hat{s}$ is clearly N-equivariant.

This transformation has a natural inverse: let $u \in L^2(X)$ be N-equivariant. For $m \in M$, we define $\check{u}(m) \in L_m^{\otimes N}$ as satisfying, for all $v \in L_m$,

$$\langle \check{u}(m), v^{\otimes N}\rangle_{L_m^{\otimes N}} = u(m, v^*).$$

This defines $\check{u}$ as a section of $L^{\otimes N}$.

If $s \in H^0(M, L^{\otimes N})$, then the formula for $\hat{s}$, extended to D, defines a holomorphic function, so that $\hat{s} \in H_N(X)$. Reciprocally if $\overline{\partial}_b u = 0$, then $\overline{\partial}\check{u} = 0$. This concludes the proof. $\square$

The notion of *kernel* for the Bergman projector in this formalism needs some explanation, since the considered objects are sections of M. The most natural construction involves the product bundle $L \boxtimes \overline{L}$ over $M \times \overline{M}$. (Here $\overline{M}$ is M with reversed complex and symplectic structure and $\overline{L}$ is its prequantum bundle; the fibres of $L \boxtimes \overline{L}$ over a point $(x, \overline{y}) \in M \times \overline{M}$ is $L_x \otimes \overline{L_y}$).

A section A of $L^{\otimes N} \boxtimes \overline{L}^{\otimes N}$ defines an integral operator on $L^2(M, L^{\otimes N})$ as follows:

$$(As)(x) = \int_{y \in M} \langle A(x,y), s(y) \rangle_{\overline{L}_y^{\otimes N}, L_y^{\otimes N}} \mathrm{d}Vol(y).$$

Then the Bergman kernel is, in this setting, a holomorphic section of $L \boxtimes \overline{L}$ which we can define using an orthonormal basis $u_1, \ldots, u_{d_N}$ of $H^0(M, L^{\otimes N})$ through:

$$S_N(x, \overline{y}) = \sum_{k=1}^{d_N} u_k(x) \overline{u_k(y)}.$$

Example 2.2.12 (The sphere)**.** *Let us reformulate Example 2.2.5. The bundle L over $\mathbb{CP}^1$ is the dual of the tautological bundle, that is, $L = O(1)$. In this case $L^{\otimes N} = O(N)$. In particular $H^0(M, L^{\otimes N})$ consists in polynomials of one variable of degree less than N.*

To investigate the Hilbert structure on $H^0(M, L^{\otimes N})$ it is convenient to consider the stereographic projection from $\mathbb{CP}^1 \setminus \{x\}$ to $\mathbb{C}$. In this chart, holomorphic sections of $L^{\otimes N}$ are holomorphic functions on $\mathbb{C}$, square-integrable with respect to the scalar product:

$$(f, g) \mapsto \int_{\mathbb{C}} \frac{f(z)\overline{g(z)}}{(1 + |z|^2)^{N+2}}.$$

Only polynomials of degree less than N have finite L^2 norm for this scalar product, and now the Hilbert structure is explicit: an orthonormal basis consists in the renormalized monomials

$$e_k = \sqrt{\frac{N+1}{\pi}} \sqrt{\binom{N}{k}} X^k.$$

In this chart the Bergman kernel is

$$S_N(x, y) = \frac{N+1}{\pi} \left(\frac{1 + x \cdot y}{\sqrt{(1 + |x|^2)(1 + |y|^2)}} \right)^N.$$

These monomials can also be interpreted as spherical harmonics for even N: the normalized monomial e_k corresponds to the spherical harmonic $Y^{k-N/2}N$.

Among other notable example of quantizable Kähler manifolds of interest are integer tori; then the space $H_N(X)$ consists of automorphic forms, and is spanned by theta functions. Figure 4 summarises the differences between Weyl and Toeplitz quantization on $\mathbb{R}^{2n}$ and present a few aspects of Toeplitz quantization on compact manifolds.

Quantization	Weyl	Toeplitz			
Manifold	$\mathbb{R}^{2n}$	$\mathbb{C}^n$	$\mathbb{S}^2$	2D torus	compact Kähler
Condition	none			integer periods	$\omega \in H_2(M, 2\pi\mathbb{Z})$
Quantum spaces	$L^2(\mathbb{R}^n)$	entire functions	$\mathbb{C}^N[X]$	modular forms	
Symbol classes	$S^m_{\rho,\delta}$	L^∞_{loc} with polynomial growth	L^∞		
Hilbert basis	Hermite functions	Monomials	Spherical harmonics	Theta functions	is finite
Coherent states	Gaussian states		Zonal harmonics	Dual of evaluation map	
Interesting operators	Schrödinger		Spin systems	Scottish flag	
Explicit qz. formula	Yes			No	

Figure 4: Weyl, Bargmann and various Toeplitz settings

2.3 Asymptotics for Toeplitz quantization

2.3.1 Ellipticity of the Hodge Laplacian

Before stating results on the asymptotic behaviour of the Szegő or Bergman kernel, we clarify the functional estimates at the core of the study of the Hardy spaces. Estimates in L^2 norms involving the operator $\overline{\partial}$ are crucial in the study of holomorphic sections. A deep and useful application of these estimates is a family of vanishing theorems (Kodaira, Cartan-Oka-Serre) and, ultimately, the resolution of Cousin-type problems. These estimates, originally developed by Kohn [Koh63; Koh64], then by Hörmander [Hör65], are also an essential technical ingredient when controlling the Szegő or Bergman kernel. However, these estimates are used as a black box for these applications [BS75; BBS08], while the original articles are quite long and are not formulated in the setting of holomorphic sections over complex manifolds. In this section we show a version of this crucial result, make the hypotheses clear and hope to familiarise our reader with the manipulation of sections of complex line bundles.

We let M be a quantizable Kähler manifold, of regularity at least C^2; this means that, in the holomorphic charts, the symplectic form ω is of class C^2 (thus, Kähler potentials are also C^2). Let let L denote the prequantum bundle over M; then L is itself of class C^2. Letting $T^{(0,1)}M = \ker(J+i)$ be the anti-holomorphic tangent space over M, we consider the following family of sectional spaces, indexed by $q \leq d = \dim_{\mathbb{C}}(M)$ and $N \in \mathbb{N}$:

$$\mathcal{L}^{(0,q),N} = L^2(M, L^{\otimes N} \otimes \Lambda^q T^{(0,1)}M).$$

This is the space of square-integrable $(0,q)$-forms with values in $L^{\otimes N}$. For every q, the operator $\overline{\partial}$ sends (a dense domain in) $\mathcal{L}^{(0,q),N}$ to $\mathcal{L}^{(0,q+1),N}$, with a closure condition: $\overline{\partial} \circ \overline{\partial} = 0$. Letting $\overline{\partial}^*$ denote the dual of $\overline{\partial}$, we define the *Hodge Laplacian* as

$$\Box = \overline{\partial}^* \overline{\partial} + \overline{\partial}\overline{\partial}^*.$$

Then, for every q, N, the Hodge Laplacian restricts to an essentially self-adjoint operator $\Box_q$ on $\mathcal{L}^{(0,q),N}$.

We will prove the following result.

Proposition 2.3.1. *Let M be a quantizable Kähler manifold without boundary and suppose that metric $\omega(J\cdot,\cdot)$ is temperate at infinity: there exists $C_g > 0$ such that, for every $x \in M$, in a chart near x for which the metric, infinitesimally, is the standard one, one has $\|\nabla\nabla g(x)\| \leq C_g$. Then, there exists $c > 0$ such that the following is true. Let $u \in L^2(M, L^{\otimes N}) = \mathcal{L}^{(0,0),N}$ be orthogonal to $H^0(M, L^{\otimes N}) = \ker(\Box_0)$.*

$$\|\Box_0 u\|_{L^2} \geq (cN - 2C_g)\|u\|_{L^2}.$$

Proof. The first step of the proof consists in adapting Theorem 2.1.4 in [Hör65].

Let U be a contractible open set in M, identified with an open set in $\mathbb{C}^d$, and let ϕ denote a Kähler potential on U. Then $L^2(U, L^{\otimes N} \otimes \Lambda^q T^{0,1}M)$ is isometric to $L^2(U, \Lambda^q(\mathbb{C}^d))$; the operator $\overline{\partial}$ is sent, via this isometry, to the following operator from $L^2(U, \Lambda^q(\mathbb{C}^d))$ to $L^2(U, \Lambda^{q+1}(\mathbb{C}^d))$:

$$T : u \mapsto e^{-N\phi - f}\overline{\partial}(e^{N\phi + f}u),$$

where, in the chart, $\omega^{\wedge d} = e^f \mathrm{d}Leb$. We let $\psi = N\phi + f \in C^2(U, \mathbb{R})$.

We will apply Stokes' formula in order to study $\overline{\partial}$ and $\Box$ on M. Since M has no boundary, there are no boundary terms in Stokes' formula. In practice, we will read information on M in a chart as above, and perform several integration by parts while forgetting about boundary terms.

Let $v \in \mathcal{L}^{(0,1),N}$. Let us show that

$$\langle v, \Box_1 v\rangle = \|\overline{\partial} v\|^2_{L^2} + \|\overline{\partial}^* v\|^2_{L^2} \geq (cN - C)\|v\|^2_{L^2},$$

for some $c > 0, C$ independent of N, v.

In the chart on U, let us examine

$$\langle T^* v, T^* v\rangle + \langle Tv, Tv\rangle.$$

Since $T = e^{-\psi}\overline{\partial} e^{\psi}$ and ψ is real-valued, one has $T^* = e^{\psi}(\overline{\partial}\cdot)e^{-\psi}$. Here $\partial\cdot$ denotes the holomorphic divergence.

First of all, if v, after the isomorphism, reads $\sum_{j=1}^d v_j \mathrm{d}\overline{z}_j$, there holds

$$\begin{aligned}\langle \overline{\partial} v, \overline{\partial} v\rangle &= \sum_{1\leq j<k\leq d} \int e^{-2\psi}\Big|\overline{\partial}_j(e^{\psi}v_k) - \overline{\partial}_k(e^{\psi}v_j)\Big|^2 \\ &= \sum_{j\neq k}\int e^{-2\psi}\Big|\overline{\partial}_j(e^{\psi}v_k)\Big|^2 - \sum_{j\neq k}\int e^{-2\psi}\overline{\partial}_j(e^{\psi}v_k)\partial_k(e^{\psi}\overline{v_j}).\end{aligned}$$

We now compute $\langle \overline{\partial}^* v, \overline{\partial}^* v\rangle$. After a first integration by parts, one has

$$\begin{aligned}\langle \overline{\partial}^* v, \overline{\partial}^* v\rangle &= \sum_{j,k}\int e^{\psi}\partial_j(e^{-\psi}v_j)e^{\psi}\overline{\partial}_k(e^{-\psi}\overline{v_k}) \\ &= -\sum_{j,k}\int e^{\psi}v_j\partial_j\Big[e^{2\psi}\overline{\partial}_k(e^{-\psi}\overline{v_k})\Big] \\ &= -2\sum_{j,k}\int e^{\psi}v_j\frac{\partial\psi}{\partial z_j}\overline{\partial}_k(e^{-\psi}\overline{v_k}) - \sum_{j,k}\int e^{\psi}v_j\partial_j\overline{\partial}_k(e^{-\psi}\overline{v_k}).\end{aligned}$$

On each of these terms, we perform a second integration by parts:

$$\begin{aligned}-2\sum_{j,k}\int e^{\psi}v_j\frac{\partial\psi}{\partial z_j}\overline{\partial}_k(e^{-\psi}\overline{v_k}) &= 2\sum_{j,k}\int \overline{\partial}_k\Big(e^{\psi}\frac{\partial\psi}{\partial z_j}v_j\Big)e^{-\psi}\overline{v_k} \\ &= 2\sum_{j,k}\int \overline{v_k}v_j\frac{\partial^2\psi}{\partial z_j\partial\overline{z}_k} + 2\sum_{j,k}\int \overline{v_k}v_j\frac{\partial\psi}{\partial z_j}\frac{\partial\psi}{\partial\overline{z_k}} + 2\sum_{j,k}\int \overline{v_k}\frac{\partial\psi}{\partial z_j}\overline{\partial}_k v_j.\end{aligned}$$

$$\begin{aligned}&-\sum_{j,k}\int e^{\psi}v_j\partial_j\overline{\partial}_k(e^{-\psi}\overline{v_k}) = \sum_{j,k}\int \partial_j(e^{-\psi}\overline{v_k})\overline{\partial}_k(e^{\psi}v_j) \\ &= \sum_{j,k}\int \partial_j(e^{-2\psi}e^{\psi}\overline{v_k})\overline{\partial}_k(e^{\psi}v_j) \\ &= \sum_{j,k}\int e^{-2\psi}\partial_j(e^{\psi}\overline{v_k})\overline{\partial}_k(e^{\psi}v_j) - 2\sum_{j,k}\int \frac{\partial\psi}{\partial z_j}e^{-\psi}\overline{v_k}\overline{\partial}_k(e^{\psi}v_j). \\ &= \sum_{j,k}\int e^{-2\psi}\partial_j(e^{\psi}\overline{v_k})\overline{\partial}_k(e^{\psi}v_j) - 2\sum_{j,k}\int \frac{\partial\psi}{\partial z_j}\frac{\partial\psi}{\partial\overline{z}_k}\overline{v_k}v_j - 2\sum_{j,k}\int \frac{\partial\psi}{\partial z_j}\overline{v_k}\overline{\partial}_k v_j.\end{aligned}$$

The two last terms cancel out, so that

$$\langle \overline{\partial}^* v, \overline{\partial}^* v\rangle = 2\int \left(\sum_{j,k} \overline{v_k} v_j \frac{\partial^2 \psi}{\partial z_j \partial \overline{z}_k}\right) + \sum_{j,k} \int e^{-2\psi} \partial_j (e^{\psi}\overline{v_k}) \overline{\partial}_k (e^{\psi} v_j).$$

Hence,

$$\langle \overline{\partial} v, \overline{\partial} v\rangle + \langle \overline{\partial}^* v, \overline{\partial}^* v\rangle = \sum_{j,k} \int e^{-2\psi} \left|\overline{\partial}_j (e^{\psi} v_k)\right|^2 + 2\int \left(\sum_{j,k} \overline{v_k} v_j \frac{\partial^2 \psi}{\partial z_j \overline{\partial} z_k}\right).$$

We now recall that $\psi = N\phi + f$. In particular, since the Kähler potential ϕ is plurisubharmonic, there exists $c > 0$ such that the Hermitian matrix $2(\partial_j \overline{\partial}_k \phi)_{j,k}$ is larger than cI. Letting $-C$ be the minimal eigenvalue of the Hermitian matrix $2(\partial_j \overline{\partial}_k f)_{j,k}$, we obtain

$$\langle \overline{\partial} v, \overline{\partial} v\rangle + \langle \overline{\partial}^* v, \overline{\partial}^* v\rangle \geq 2(cN - C)\|v\|_2^2.$$

We now conclude the proof. Let $u \in L^2(M, L^{\otimes N})$, be orthogonal to $H^0(M, L^{\otimes N})$ which is the kernel of $\square_0$). Since $\square_0$ is essentially self-adjoint, u belongs to the closure of its image. Let $\epsilon > 0$ and let $a, b \in L^2(M, L^{\otimes N})$ such that $u = \square_0 a + b$ with $\|b\|_{L^2} \leq \epsilon$.

Letting $v = \overline{\partial} u$, we apply the previous estimate, with the supplementary simplification that $\overline{\partial} v = \overline{\partial}\overline{\partial} u = 0$:

$$\|\square_0 u\|^2 = \|\overline{\partial}^* v\|^2 \geq (cN - C)\|\overline{\partial} u\|^2.$$

In a similar manner,

$$\|\square_0 a\|^2 \geq (cN - C)\|\overline{\partial} a\|^2.$$

Now, for N large enough such that $cN > C$, one has

$$\begin{aligned}
\|u\|^2 = \langle u, \square_0 a + b\rangle &\leq |\langle u, \square_0 a\rangle| + \epsilon\|u\| \\
&\leq \|\overline{\partial} u\|\|\overline{\partial} a\| + \epsilon\|u\| \\
&\leq \frac{1}{cN - C}\|\square_0 u\|\|\square_0 a\| + \epsilon\|u\| \\
&\leq \frac{1}{cN - C}\|\square_0 u\|(\|u\| + \epsilon) + \epsilon\|u\|.
\end{aligned}$$

This inequality is valid for all $\epsilon > 0$, so that, finally,

$$\|u\| \leq \frac{1}{cN - C}\|\square_0 u\|.$$

It remains to prove that one can choose c and C *globally*. If M is compact or (asymptotically) homogeneous, this poses no problem. In the general case, however, one has to impose that the metric $\omega^{\wedge d}$ does not change too fast, at its own scale.

As discussed in Subsection 2.2.1, near any point in M, one can choose a chart in which the Kähler potential reads $\frac{1}{2}|x|^2 + O(|x|^3)$. In particular, for any $c < \frac{1}{2}$, one can cover M with charts on which the Hessian of a Kähler potential is always greater than c. In these charts, one has $C \leq \|\nabla\nabla g\| \leq 2\|\nabla\nabla g(\rho(0))\| = 2C_g$.

In a chart as above, at the point zero, the metric is the standard one; however its second derivatives at zero might be impossible to bound globally. This behaviour is excluded by our condition on the metric; this concludes the proof. $\square$

Remark 2.3.2. One can remove the condition of mildness of the metric, and obtain a much more elegant result

$$\|\Box_0 u\| \geq cN\|u\|,$$

if we replace $L^2(M, L^{\otimes N} \otimes \Lambda^q T^{(0,1)}M)$ with $L^2(M, L^{\otimes N} \otimes \Lambda^q T^{(0,1)}M \otimes K)$ where K is the half-form bundle over M; by this means, one can get rid of the factor f in the definition of T.

More generally, in a few contexts, it is more satisfying to replace the tensored spaces $L^{\otimes N}$ with $L^{\otimes N} \otimes K$ in the definition of Hardy spaces and Toeplitz operators. The reader can check that, for any Hermitian line bundle K' over M with curvature globally bounded, a version of the spectral gap above holds for the family of spaces $L^2(M, L^{\otimes N} \otimes \Lambda^q T^{(0,1)}M \otimes K \otimes K')$.

From the ellipticity of $\Box_0$ above, one can deduce that $\overline{\partial}$ satisfies an elliptic estimate on the orthgonal of its kernel:

Proposition 2.3.3. *Under the conditions above, if u is orthogonal to $H^0(M, L^{\otimes N})$, one has*

$$\|\overline{\partial} u\|^2 \geq (cN - C)\|u\|^2.$$

Proof. Since the Hodge Laplacian $\Box_0$ is essentially self-adjoint, from the previous proposition, its spectrum decomposes as

$$\sigma(\Box_0) \subset \{0\} \cup [cN - C, +\infty),$$

where the first component stems from $H^0(M, L^{\otimes N})$, and the second component from its orthogonal.

Hence, the constrained minimisation of the Rayleigh quotient yields

$$\inf_{\substack{u \perp H^0(M, L^{\otimes N}) \\ \langle u, u \rangle = 1}} \langle \Box_0 u, u \rangle \geq cN - C.$$

Since $\langle \Box_0 u, u \rangle = \langle \overline{\partial} u, \overline{\partial} u \rangle$, the claim is proved. □

2.3.2 Asymptotics of the Szegő kernel and calculus of Toeplitz operators

The analysis of Toeplitz operators depends on the degree of knowledge about the Szegő or Bergman projector through which they are defined. In the limit $N \to +\infty$, one can perform asymptotic expansions of these projectors. As they historically stem from microlocal results on the full Szegő projector of Definition 2.2.4, and as the formulation of results on the Szegő side is less intricate than in the Bergman case (no sections of line bundles are involved, the Szegő projectors S_N acts on functions on the same manifold X), we present these results in the circle bundle point of view.

Recall that in the Bargmann case the projector involved had an explicit kernel

$$\Pi_N(x, y) = \sum_{k=0}^{+\infty} e_k(x)\overline{e_k(y)} = \left(\frac{N}{\pi}\right)^n \exp\left(-\frac{N}{2}|x - y|^2 + iN\Im(x \cdot \overline{y})\right).$$

In the case where the base manifold M is compact, since $H_N(X)$ is finite-dimensional and consists of smooth functions, the operator S_N admits an integral kernel: if $e_1, \dots e_{d_N}$ denotes an orthonormal basis of $H_N(X)$ then this kernel is

$$S_N : (x, y) \mapsto \sum_{j=1}^{d_N} e_j(x)\overline{e_j(y)}.$$

Remark 2.3.4. In this "circle bundle" formulation, the kernel of S_N is a function on $X \times X$ which is $(N, -N)$-equivariant (with respect to the natural $\mathbb{T}^2$ action on $X \times X$). The notion of integral kernel for S_N in the line bundle formulation requires a geometric construction (in this case, the integral kernel is a section of a convenient bundle over $M \times M$). See Section 6.1.1 for a definition.

The kernel Π_N then serves as a universal model for the Szegő kernel. In the large N limit, one can write, for $x, y \in M$ close enough so that X can be trivialised,

$$S_N((x, v), (y, v')) = e^{iN(v-v')}\Pi_N(x, y) \sum_{k=0}^{K} N^{-k} a_k(\sqrt{N}x, \sqrt{N}y) + E_K(N, x, y).$$

Various methods yield different versions of the control of coefficients a_k, and the error function E_K. This "near-diagonal expansion" is completed by off-diagonal controls, a typical statement being as follows: if x and y are at fixed distance, then as $N \to +\infty$ one has $S_N(x, y) = O(N^{-\infty})$, that is, $S_N(x, y)$ decays faster than any polynomial in N^{-1}. Thus, one is able to control the kernel S_N up to an $O(N^{-\infty})$ error.

Under additional regularity conditions (the Kähler structure needs to be analytic), one can control in a fine way the exponential terms in the Szegő kernels: there exists a function ρ such that, for $x, y \in M$ close, one has

$$S_N((x, v), (y, v')) = e^{iN(v-v')} \frac{N^n}{\pi^n} e^{N\rho(x,y)} \sum_{k=0}^{K} N^{-k} a_k(x, y) + E_K(N, x, y).$$

In this situation we are able to replace the fixed index K by a function of N, which is typically cN for $c > 0$ small, so that the error term E_K is $O(e^{-c'N})$ for $c' > 0$ small.

Using the expansions of the Szegő kernel, one can prove that the composition of two Toeplitz operators is a formal series of Toeplitz operators.

Proposition 2.3.5 ([Sch00]). *Let M be a compact quantizable Kähler manifold. There exists a star-product on the space of formal expansions $C^\infty(M)[[\eta]]$, written as $f \star g = \sum_{j=0}^{+\infty} \eta^j C_j(f, g)$, that coincides with the Toeplitz operator composition: as $N \to +\infty$, one has, for every integer K, that*

$$T_N(f)T_N(g) - \sum_{j=0}^{K} N^{-j} T_N(C_j(f, g)) = O(N^{-K-1}).$$

The functions C_j are bilinear differential operators of degree less than $2j$, and

$$C_0(f, g) = fg.$$

An explicit derivation of $C_j(f,g)$ is given by Proposition 6 of [Cha03]. In particular, it gives the correspondence principle

$$[T_N(f), T_N(g)] = \frac{-i}{N} T_N(\{f,g\}) + O(N^{-2}).$$

This composition law, in turn, allows one to study inverse of Toeplitz operators as well as its spectrum.

Toeplitz quantization depends on the complex structure J on the Kähler manifold; indeed the space of quantum states itself depends on J. However, from the correspondence principle, it is generally useful to translate symplectic properties of symbols into properties of operators. To this end, one needs to investigate how symplectomorphisms act on Toeplitz quantization.

To a (local) symplectomorphism between Kähler manifolds, one can associate an almost unitary (local) transformation on the Hardy spaces, such that, at first order, the Toeplitz quantizations on both sides are related by the symplectic change of variables in the symbols [Cha07]:

Proposition 2.3.6. *Let $\sigma : (M,x) \mapsto (M',y)$ be a local symplectomorphism between two quantizable compact Kähler manifolds.*

Let U be a small open set around x. Then there exists, for every N, a linear map $\mathfrak{S}_N : H^0(M, L^{\otimes N}) \mapsto H^0(M', K^{\otimes N})$ and a sequence of differential operators $(L_j)_{j\geq 1}$, such that, for any sequence $(u_N)_{N\geq 1}$ of sections which are $O(N^{-\infty})$ outside of U, and for any symbol $a \in C^\infty(M')$, one has:

$$\begin{aligned} \|\mathfrak{S}_N u_N\|_{L^2} &= \|u_N\|_{L^2} + O(N^{-\infty}) \\ \mathfrak{S}_N^{-1} T_N(a) \mathfrak{S}_N u_N &= T_N\left(a \circ \sigma + \sum_{k=1}^{\infty} N^{-i} L_j(a \circ \sigma)\right) u_N + O(N^{-\infty}). \end{aligned}$$

Moreover, for every $j \geq 1$, the differential operator L_j is of degree $2j$.

2.4 Applications of Toeplitz operators

2.4.1 Link with Weyl quantization

Equation (2) relates harmonic oscillators in the Bargmann versus Weyl representation, using the *Bargmann transform* of Definition 2.1.2. This unitary transform can be used to relate general Toeplitz operators with pseudodifferential operators, which are defined by a singular integral kernel. The Weyl pseudodifferential operator associated with a convenient function a on $\mathbb{R}^{2n}$ has integral kernel

$$Op_W^\hbar(a) : (x,y) \mapsto \frac{1}{(2\pi\hbar)^n} \int_{\mathbb{R}^n} e^{i\frac{\xi\cdot(x-y)}{\hbar}} a\left(\frac{x+y}{2}, \xi\right) \mathrm{d}\xi.$$

Equation (2) then generalises to the following property: if $f \in L^\infty$ with polynomial growth, then

$$\mathcal{B}_N^* T_N(f) \mathcal{B}_N = Op_W^{N^{-1}}\left(e^{\frac{\Delta}{2N}} f\right).$$

The formula above needs several comments.

- Even if f is highly irregular, the function $e^{\frac{\Delta}{2N}} f$ is real-analytic and can be extended in a strip of imaginary part smaller than $\frac{1}{2N}$. Thus, the pseudodifferential operators yielded by this formula are quite regular.

- The infimum of $e^{\frac{\Delta}{2N}} f$ is greater than the infimum of f. This sheds some light on the positivity issues for pseudodifferential operators. It is not true in general that $f \geq 0 \Rightarrow Op_W^h(f) \geq 0$. In general one can prove a lower bound of $-C\hbar$, which corresponds to the Toeplitz picture.

With this conjugation in mind, Bargmann quantization corresponds to pseudodifferential operators, using non-conventional symbol classes.

We have seen in Subsection 2.3.2 that the Bargmann situation is a universal local model for all Toeplitz operators; this will be of crucial importance in Part I of this manuscript. Using the Bargmann transform, it means that Toeplitz quantization (in its general formulation) and Weyl quantization are microlocally equivalent, in the C^∞ category (which corresponds to $O(N^{-\infty})$ error). This point of view, however, is not entirely satisfying, even concerning our results in the setting of smooth symbols [Del16; Del17]. Various motivations for dealing with Toeplitz quantizations for our initial problem (spin operators) are detailed in Section 1.4. We dare advocate for the opposite trend: the Bargmann setting for Toeplitz quantization can be studied and used without knowledge of delicate complex geometry and allows one to work directly in phase space and to use positivity estimates. Toeplitz quantization can also be performed on neighbourhoods of the zero section in cotangent line bundles over compact real-analytic Riemannian manifolds. In particular, in this setting, the Laplace-Beltrami operator can be written as a Toeplitz operator up to an error $O(e^{-c\hbar^{-1}})$.

The different roles played by x and ξ in Weyl quantization allow one to perform specific manipulations. For instance, one can rapidly conjugate a Schrödinger operator $-\hbar^2\Delta + V$ with a multiplication operator of the form $e^{\phi(x)/\hbar}$, allowing to prove specific estimates. Another example is the treatment of resonances of Schrödinger operators. It is unknown how to pass these techniques to Toeplitz operators; however, recent work [FT17] study resonances of dynamical systems by introducing a specific, weight-dependent quantization in the spirit of Berezin-Toeplitz quantization.

2.4.2 Representation theory and automorphic forms

A particular motivation for general geometric quantization is the study of representations of Lie groups. In fact, it allows to classify all finite-dimensional, unitary representations of compact groups [Kos70]. Berezin-Toeplitz quantization, while more specific, enjoys some applications to representation theory. Spin operators of Section 1.1 correspond to the irreducible representations of $SU(2)$, whose structure is well-known.

A less trivial example is given by the family of tori $\mathbb{C}/\Lambda$, where Λ is a discrete, cocompact subgroup of $\mathbb{C}$. Up to a linear change of variables, one can write $\Lambda = \mathbb{Z}+\tau\mathbb{Z}$, where $\tau \in {}^{SL_2(\mathbb{R})}\!/_{SL_2(\mathbb{Z})}$ is a complex number of positive imaginary part modulo the operations $\tau \mapsto \tau + 1$ and $\tau \mapsto -\tau^{-1}$ which preserve Λ. Such a torus is always quantizable up to a scaling of the symplectic structure. The Szegő kernel and Hardy space are not as explicit as for the sphere (see Example 2.2.5), but a convenient basis of $H^0(\mathbb{C}/\Lambda, L^{\otimes N})$ is given by Jacobi theta functions (see Section 4 in [Blo+03]

for a detailed construction in the square case $\tau = i$). Using an arithmetical language, $H^0(\mathbb{C}/\Lambda, L^{\otimes N})$ consists of automorphic forms of weight $2N$ for Λ, that is, holomorphic functions f on $\mathbb{C}$ satisfying the periodicity conditions

$$\begin{aligned} f(z+1) &= f(z) \\ f(z+\tau) &= e^{N\pi(-\tau^2-2\tau z)} f(z). \end{aligned}$$

Studying the dependence in τ of the quantization is then equivalent to considering the theta functions as depending on two parameters $(z, \tau) \in \mathbb{C} \times \mathbb{H}$. This point of view has numerous applications in number theory [Mum83].

The same strategy applies to constant negative curvature compact surfaces, of the form $\mathbb{H}/\Gamma$ where Γ is a discrete cocompact subgroup of $SL_2(\mathbb{R})$. Again, the Hardy space consists of automorphic forms: for $\gamma = \begin{pmatrix} a & b \\ c & d \end{pmatrix} \in SL_2(\mathbb{R})$ and $z \in \mathbb{C}$ we let $j(\gamma, z) = cz + d$; then functions in the Hardy space are holomorphic functions on $\mathbb{H}$ such that, for all $\gamma \in \Gamma$,

$$f(z) = j(\gamma, z)^{-2N} f(\gamma \cdot z).$$

This definition of automorphic forms is reminiscent of the behaviour of the theta functions with respect to τ: there holds ([Mum83], Proposition 11.1)

$$\begin{aligned} \theta^8\left(0, \begin{pmatrix} 1 & 2 \\ 0 & 1 \end{pmatrix} \cdot \tau\right) &= \theta^8(z, \tau+2) = \theta^8(z, \tau) = (0 \times \tau + 1)^4 \theta^8(z, \tau) \\ \theta^8\left(0, \begin{pmatrix} 0 & 1 \\ -1 & 0 \end{pmatrix} \cdot \tau\right) &= \theta^8(0, -1/\tau) = (-i\tau)^4 \theta^8(0, \tau) = (-1 \times \tau + 0)^4 \theta^8(0, \tau). \end{aligned}$$

Hence, θ^8 is an automorphic form of weight 4 for the group Γ generated by the two matrices above. In this case $\mathbb{H}/\Gamma$ is the three-cusp sphere (which is not compact but has finite volume).

Similarly, the dependence on Γ of the quantization of $\mathbb{H}/\Gamma$ may be related to the Berezin-Toeplitz quantization on Teichmüller space of hyperbolic surfaces. We are not aware of developments in this direction, or towards an application of Berezin-Toeplitz quantization to the representation theory of $SL_2(\mathbb{R})$. We hope that our specific analysis of the Bergman kernel in this case (Chapter 6) will open perspectives in this respect.

2.4.3 Some interesting Toeplitz operators

We have already presented a handful of connections and applications of Toeplitz operators: physics of spin systems, analysis of pseudodifferential operators, group representations... We present here a few puzzling Toeplitz operators, or families of such.

SCOTTISH FLAG (Thanks to M. Zworski for drawing this example to our attention). The Scottish flag operator is the Toeplitz quantization, on the square torus, of the complex-valued symbol

$$(x, \xi) \mapsto \cos(x) + i\cos(\xi).$$

It is a classical, yet mysterious, non-selfadjoint operator. The analysis of non-selfadjoint operators is much harder than the self-adjoint one since almost

eigenvectors do not correspond to an approximation of the spectrum: in other terms, for a general matrix A, the norm of the resolvent $(A - zI)^{-1}$ might be very large even if z is far from the spectrum of A.

One can prove [BU03] that the $O(N^{-\infty})$ pseudospectra (set of approximate eigenvalues) of the Scottish flag is $\{\sigma + i\tau \in \mathbb{C}, |\sigma| \leq 1, |\tau| \leq 1\}$. It is conjectured that the exact spectrum is located on the diagonals $\{\sigma = \pm\tau\}$, forming a Scottish flag. Our recent developments to the theory of Toeplitz operators in real-analytic regularity (Part II) might allow one to make some progress towards this conjecture.

HIGGS OPERATOR (Thanks to L. Charles for this example) The Higgs operator (or, more precisely, the simplest case of a Higgs operator) is the Toeplitz quantization of the following symbol on $(\mathbb{S}^2)^2$:

$$(x_1, y_1, z_1, x_2, y_2, z_2) \mapsto (x_1 - x_2)^2 + (y_1 - y_2)^2.$$

This symbol has minimum zero; the minimum is reached on a transverse union $Z_+ \cup Z_-$ of submanifolds of $(\mathbb{S}^2)^2$, with

$$Z_\pm = \{(x_1, y_1, z_1, x_1, y_1, \pm z_1), (x_1, y_1, z_1) \in \mathbb{S}^2\}.$$

Note that Z_+ is symplectic while Z_- is Lagrangean. Thus, one cannot apply the results of Section 5.5, which requires the manifolds Z_+ and Z_- to be isotropic. The ground state of the Higgs operator is conjectured to be non-degenerate and supported only on Z_-.

QUANTUM CAT MAP The Cat Map is the following transformation on the square torus:

$$\sigma : (x, \xi) \mapsto (2x + \xi, x + \xi).$$

It is an ergodic, mixing Anosov symplectomorphism, which does not however preserve the standard complex structure. Hence, the induced change of variables $\Sigma : u \mapsto u \circ \sigma$ does not preserve $H^0(\mathbb{T}^2, L^{\otimes N})$. It can be however projected into $A_N = S_N \Sigma S_N$, which is invertible. Then $(A_N A_N^*)^{-\frac{1}{2}} A_N$ is a unitary map on the Hardy space, which quantizes σ (more general symplectic changes of variables can be quantized in this fashion; this yields Proposition 2.3.6). A convenient notion of quantum ergodicity holds for this operator [Zel97]. This of course generalises to more general symplectic maps on manifolds, which are linked to Toeplitz quantization as well as the study of automorphic forms, and for which unique quantum ergodicity is conjectured.

2.5 More general settings

2.5.1 Almost Kähler quantization

Toeplitz quantization on compact Kähler manifolds as presented in Subsection 2.2 has many different generalisations, which are mostly concerned with the same geometrical setting: the complex structure J is replaced with an almost complex structure, that is, a general linear operator J acting on the fibres of TM, such that $J^2 = -Id$. The Cauchy-Riemann operator $\overline{\partial}$ is still well-defined but does not have, in general, any local solution. Under these assumptions, (M, ω, J) is called an almost Kähler manifold.

A quantization scheme (more precisely, its microlocal equivalent) for compact almost Kähler manifolds was proposed in [BG81], and proceeds along the following lines: in the Kähler case, one can compute an off-diagonal expansion of the Szegő kernel (see Section 3.2). The construction of this expansion can still be performed in the almost Kähler case. This yields an approximate Szegő projector $\widetilde{S}_N$, such that $\widetilde{S}_N\widetilde{S}_N = \widetilde{S}_N + O(N^{-\infty})$. In particular, eigenvalues of $\widetilde{S}_N$ are close to 1 or to 0. Let χ denote any smooth real function such that $\chi = 1$ on an open neighbourhood of 1 and $\chi = 0$ on an open neighbourhood of 0, then $\chi(\widetilde{S}_N)$ is an orthogonal projector, which is $O(N^{-\infty})$-close to $\widetilde{S}_N$. This artificial Szegő kernel, of finite range, shares the same properties as in the Kähler case, modulo $O(N^{-\infty})$ errors. Using this projector, one can prove for instance [SZ02] that almost Kähler quantizable manifolds can be embedded into $\mathbb{CP}^N$, with a deformation of the metric and the almost complex structure controlled by $O(N^{-\infty})$.

A variant on this method was proposed by Charles [Cha16; Cha07], and does not involve advanced microlocal tools such as Fourier Integral Operators with complex phase, contrary to [BG81]. Dealing directly with the space of square-integrable sections of a high power tensor bundle $L^{\otimes N}$, one can define in a direct way an approximate Szegő kernel $\widetilde{S}_N$.

Remark 2.5.1 (Symplectic, Kähler and almost Kähler manifolds)**.** The following question now arises: which symplectic manifolds are Kähler, and which ones are almost Kähler?

The first example of a compact symplectic, not Kähler manifold was provided by Thurston [Thu76], as a quotient of $\mathbb{R}^4$ by a discrete group of linear symplectomorphisms. The obstruction is of cohomological nature: odd Betti numbers b_{2k+1} of compact Kähler manifolds must be even, so that any compact symplectic manifold which fails to satisfy this condition cannot admit a Kähler structure.

More involved examples of compact symmetric spaces with a symplectic structure but no Kähler structure were gradually found (in particular, examples which cannot be detected by the De Rham cohomology); see [TO06] for a panorama on the question.

The case of almost complex structures is totally different. In fact, all symplectic manifolds allow compatible almost Kähler structures (see [MS98], Proposition 4.1). Thus, constructing a generalisation of Kähler quantization to the almost Kähler case allows one to cover *all* compact symplectic manifolds.

2.5.2 Dirac operators and Bochner Laplacians

A completely different point of view treats a case which is still more general than almost Kähler manifolds. Let us remove the condition between J, ω, and the Riemannian metric g. We are left with the following data:

- (M, ω) is a compact symplectic manifold such that ω has integral Chern class.
- (L, h) is a hermitian line bundle with a connection ∇, with $curv(\nabla) = 2i\pi\omega$.
- g is any Riemannian metric on M.

In this situation, there exists an almost complex structure J which is both compatible with ω and g, in the sense that

$$\omega(J\xi, J\eta) = \omega(\xi, \eta)$$
$$g(J\xi, J\eta) = g(\xi, \eta).$$

However J does not relate ω and g.

In this setting, one can construct [Ver96; BU96] a spin^c-Dirac operator, which is a degree 1 elliptic differential operator D acting on $\Omega^{0,\bullet}(M, L)$, the sum of spaces of $(0, q)$-sectional forms on L, quotiented by algebraic relations, thus forming a *Clifford algebra*. Replacing L by $L^{\otimes N}$ yields a sequence of Dirac-type operators D_N.

The spectrum of D_N, in the large N limit, consists in two very different sets. Indeed there exist constants $C > 0$ and $c > 0$ such that, for every N, one has

$$\sigma(D_N^2) \cap [C, cN] = \emptyset.$$

This *spectral gap* allows to define the equivalent of the Hardy spaces $H^0(M, L^{\otimes N})$ as the low-energy space of D_N. The spin^c Bergman projector is

$$P_N = 1_{[0,C]}(D_N^2).$$

The asymptotic properties of P_N are very similar to the Kähler case [MM02; MM07; MM08], although in this degree of generalisation the results are slightly weaker.

An easy version of the spin^c-Dirac construction consists in the case where J is an exact complex structure. This corresponds to the following manipulation: start with a Kähler manifold (M, ω, J), then consider another symplectic form ω_1 which belongs to the same Chern class as ω_0. One can still construct a hermitian line bundle L_1 with Levi-Civita curvature ω_1, and Hardy spaces $H^0(M, L_1^{\otimes N})$. However we keep the L^2 structure from the initial Riemannian metric g, so that the Hilbert structure on the quantum space, the Bergman projector, and eventually the Toeplitz operators, hold information from both ω and ω_1. These *magnetic* Toeplitz operators can be defined and studied without the tools of Clifford algebras.

The last generalisation of Toeplitz quantization that we treat here replaces the Spin^c-Dirac operator with a Bochner Laplacian [GU88]. Let again (X, ω) be a symplectic manifold of real dimension $2n$ and let J be a complex structure such that $\omega(J\xi, J\eta) = \omega(\xi, \eta)$. Let g denote a Riemannian metric on M (which may or may not coincide with $\omega(J\cdot, \cdot)$). Finally let (L, h) be a Hermitian line bundle with connection ∇ such that $curv(\nabla) = 2i\pi\omega$. (Again ∇ may or may not be the Levi-Civita

connection). Then the tensor power $L^{\otimes N}$ has a natural connection ∇_N. Letting ∇_N^* denote the adjoint (for the Hilbert structure given by g and h) of ∇_N, we let

$$\Delta_N = \nabla_N^* \nabla_N - nN.$$

Then Δ_N enjoys a spectral gap property:

$$\sigma(\Delta_N) \cap [C, cN] = \emptyset.$$

One can then, as before, study the associated Szegő kernel [Kor17], as well as Toeplitz operators.

Part I

SMOOTH METHODS

This part is devoted to the study of the low-energy spectrum of Toeplitz operators with C^∞ symbols. In particular, we study subprincipal effects on eigenfunction localisation, such as *quantum selection*, an effect by which the ground state, and low-energy states, concentrate only on a part of the classical minimal set.
Our original goal was to extend results known in the Schrödinger case [HS84; HS86a] about low-energy eigenfunction concentration in the semiclassical limit, to the context of Toeplitz operators, with applications to spin systems such as the antiferromagnetic Heisenberg model on the Kagome lattice. The articles cited above respectively treat the case of a potential with several non-degenerate minima, and the case of a potential which is minimal along a submanifold, in a transverse non-degenerate way (the Morse-Bott condition). This last case had already been extended to magnetic Schrödinger operators [RN15; Hel+16] but had not been studied for more general pseudodifferential operators.

results

In this part, using the asymptotics of the Szegő kernel, we study quantum selection in the case of non-degenerate wells (chapter 4), and then in a general context (Section 5.3).
This allows us to treat arbitrarily complicated minimal sets; in the case of the Heisenberg Antiferromagnet on the Kagome lattice, the minimal set is an analytic stratified manifold.
In the particular case of a symbol which is minimal in a non-degenerate way on an isotropic manifold (a geometrical generalisation of [HS86a]), we obtain a complete expansion of the first eigenvector and eigenvalues in increasing powers of the semiclassical parameter (Section 5.4).
We also treat one degenerate case, in which the minimal set of the symbol is a transverse union of two isotropic submanifolds (section 5.5).

To do so, we develop operator estimates on shrinking scales for the Szegő projector (Proposition 3.3.1), using a kernel expansion which we improve in the almost Kähler case (Proposition 3.2.4).
Aside a general result on the concentration speed of eigenfunctions on the corresponding classical energy level (Proposition 4.3.1), we study in detail (Theorems 4.1 and 4.2) the case of "nondegenerate wells", using the expansion of the Szegő kernel and standard perturbation arguments. These wells can resonate or not; we reach $O(N^{-\infty})$ precision, which is sharp in the context of smooth symbols.
We then prove an analogue of Melin's estimate (Proposition 5.2.4) for a broad class of symbols, through the definition of the Melin value (Definition 5.1.1) which captures the subprincipal contributions to the energy at a given point. We deduce a general rule for subprincipal effects on localisation (Theorem 5.1): the ground state (and other states with low energy) microlocalises only on the part of the minimal set of the principal symbol on which the Melin value is minimal.
In the case of miniwells, where the principal symbol is minimal on an isotropic submanifold, under a condition of non-degeneracy, one can compute a full expansion of the ground state (Theorem 5.2). The same applies in a case where the minimal set is a transverse union of isotropic submanifolds (Theorem 5.3). Weyl asymptotics (Theorem 5.4) are also computed in the two situations above.

discussion

In order to obtain Theorems 5.2 and 5.3, we construct a symplectic normal form in each case, in order to partially diagonalise the transverse Hessian. The problem then reduces to a confining effective operator in the slow modes, in the spirit of the Born-Oppenheimer approximation.
We formulate our results in the Kähler or almost Kähler setting. As we use few specific properties of Kähler quantization beside the Szegő kernel expansions, this work extends to the various generalisations of Toeplitz operators, which were presented in Section 2.5. This only requires a small modification in the definition of the function μ, for which the new model Bargmann space must not be taken in coordinates which preserve the infinitesimal metric, but which is compatible at the considered point with the connection (in other terms, the quadratic weight $e^{-N|z|^2}$ becomes $e^{-NQ(z)}$, where Q is a suitable quadratic form).
General results [Cha03] give a microlocal equivalence between Weyl and Toeplitz quantization, at the price of a change of symbols which is already non-trivial at the subprincipal level. This microlocal equivalence cannot be made global without technicalities. Moreover, we state our results in a degree of generality which was never performed for pseudo-differential operators, as for instance an extension of the "miniwell" situation, which had only been studied for (magnetic) Schrödinger operators. This, and the trivial positivity estimate for Toeplitz operators (Proposition 2.2.9), motivated a study which we write down in the Toeplitz formalism (we only use Weyl quantization to treat the effective operators in sections 5.4 and 5.5), with the additional benefit that microlocalisation is much simpler to define and to study in the Toeplitz setting.
In the Schrödinger case [HS84; HS86a], exponential decay of the eigenstates was obtained, in space variables. For Toeplitz quantization, as well as general pseudo-differential operators, such results require real-analytic regularity, which we treat in Part II of this thesis.

3

THE SZEGŐ KERNEL

In this chapter we present some techniques which allow to give asymptotic expansions of the Szegő kernel of Definition 2.2.4. The asymptotic regime here is $N \to +\infty$, on a fixed quantizable and compact Kähler manifold, or more general cases developed in Section 2.5. To this end, in Section 3.1 we rapidly present the "usual" complex stationary phase lemma, which we will use on a regular basis. In Section 3.2 we recall the principal results on the expansions of the Szező kernel which appear in the literature, and which we contributed to improve. Section 3.3 is devoted to an operator version of the kernel estimates stated before. To conclude, in Section 3.4 we detail the proof of Proposition 3.2.4 in the almost Kähler case, which appears in previous work [Del16]. The proof consists in making more precise the remainder estimates of [SZ02].

The reader interested in applications to the spectral study of Toeplitz operators can use Propositions 3.2.3 and 3.3.1 as a black box and proceed to Chapter 4.

3.1 The complex stationary phase lemma

Fourier Integral Operators were first developed by Hörmander [Hör71] in the case of a *real* phase. The case of a complex phase was then studied by Melin and Sjöstrand [MS75] before a comprehensive theory of all cases emerged [Hör85]. The fundamental tool is, in each case, the *stationary phase lemma*, which allows to compute expansions of integrals with an oscillating phase. One can then define a calculus of Fourier Integral Operators. The point is that the microlocal Szegő projector S of Definition 2.2.4 is a Fourier Integral Operator [BS75]; this structure can be copied to the almost Kähler case in order to build a Szegő projector [BG81].

The general theory of Fourier Integral Operators is outside the scope of this thesis; we will only rely on various formulations of the complex stationary phase lemma, which we develop here in the smooth setting.

3.1.1 Almost holomorphic extensions

Let $U \subset \mathbb{R}^n$ an open set and $f \in C^\infty(U, \mathbb{R})$. If f is analytic, there is a natural notion of holomorphic extension of f to a neighbourhood of U in $\mathbb{C}^n$. Reciprocally, a holomorphic function on a neighbourhood of U, once restricted to U, is analytic. How can one extend f into a function $\widetilde{f}$ on the complex space, while guaranteeing that $\overline{\partial}\widetilde{f}$ is as small as possible?

Proposition 3.1.1 ([MS75])**.** *Let $U \in \mathbb{R}^d$ an open set and $f \in C^\infty(U, \mathbb{C})$. There exists a neighbourhood V of U in $\mathbb{C}^d$, and $\widetilde{f} \in C^\infty(V, \mathbb{C})$ such that*

$$\begin{aligned} \widetilde{f}|_U &= f \\ \overline{\partial} f(z) &= O_{\Re(z)}(|\Im(z)|^\infty) \end{aligned}$$

The estimate on $\overline{\partial} f$ is uniform on compact sets.

Such a function $\widetilde{f}$ is called an almost holomorphic extension of f.

Proof. Let $\partial^\alpha f(x)$ denote the successive differentials of f at $x \in U$, for $\alpha \in \mathbb{N}^d$. Recall from the Borel lemma that the Taylor expansion of a smooth function is arbitrary; we will use this fact to construct the extension $\widetilde{f}$.

Let $\chi \in C^\infty(\mathbb{R}^d, \mathbb{R})$ be a smooth function such that $\chi = 1$ near 0 and $\chi = 0$ near infinity. We choose an extension $\widetilde{f}$ for f of the form:

$$\widetilde{f}(x,y) = \sum_{\alpha \in \mathbb{N}^d} \partial^\alpha f(x) \frac{(iy)^\alpha}{\alpha!} \chi(t_\alpha(x) y),$$

where $t_\alpha(x) > 0$ is chosen large enough so that this sum converges, in the spirit of the Borel lemma.

We observe that $\widetilde{f}(x,0) = f(x)$, and moreover

$$\overline{\partial} \widetilde{f}(x,y) = O_x(|y|^\infty).$$

Indeed, for any $m \in \mathbb{N}$, if $|y|$ is small enough so that $\chi(t_\alpha(x)y) = 1$ for all $|\alpha| \leq m$, then $\overline{\partial} \widetilde{f}(x,y) = O_x(|y|^{m+1})$.

To conclude, the partial derivatives $\partial^\alpha f$ are bounded uniformly on compact sets of U, so that the coefficients $t_\alpha(x)$ are bounded on compact sets; thus the estimate on $\overline{\partial} \widetilde{f}$ is uniform. □

There is no unique choice of almost holomorphic extension of f, but all almost holomorphic extensions share the same Taylor expansion on U.

3.1.2 Complex stationary phase lemma

Using almost holomorphic extensions, one can give a complex-valued version of the stationary phase lemma.

Proposition 3.1.2. *Let $U \subset \mathbb{R}^d \times \mathbb{R}^p$ an open set and $\phi \in \mathbb{C}^\infty(U, \mathbb{C})$. We suppose that ϕ is a* positive phase function*, that is:*

- $\Re(\phi) \leq 0$ *on U.*
- *For all $(x, \lambda) \in U$, there exists exactly one $x_0(\lambda) \in \mathbb{R}^d$ such that $(x_0(\lambda), \lambda) \in U$ and $\Re\phi(x_0(\lambda), \lambda) = 0$.*
- *One has $(\mathrm{d}_x \Im\phi)(x_0(\lambda), \lambda) = 0$.*
- *The Hessian of $\Re\phi$ at $(x_0(\lambda), \lambda)$ is negative definite.*

Under the conditions above, the function $\lambda \mapsto x_0(\lambda)$ is smooth.

There exists a sequence of differential operators D_j, with continuous dependence on λ, such that D_j is of degree $2j$, and such that, for any $a \in C^\infty(U, \mathbb{R})$ and any $K \in \mathbb{N}$ one has

$$\int_{x \in \mathbb{R}^d,\, (x,\lambda) \in U} e^{N\phi(x,\lambda)} a(x,\lambda) \mathrm{d}x = N^{\frac{d}{2}} \sum_{j=0}^{K+n} N^{-j} (D_j a)(x_0(\lambda), \lambda) + O(N^{-K}).$$

In particular, $D_0 a = \frac{1}{\sqrt{\det(2\pi \operatorname{Hess}(\phi)(x_0(\lambda),\lambda))}} a$.

Proof. The proof relies on the Morse lemma applied to an almost holomorphic extension of ϕ in the x variable.

Let $\widetilde{\phi} : V \mapsto \mathbb{C}$ denote an almost holomorphic extension of ϕ, and $\widetilde{a}$ denote an almost holomorphic extension of a. Then, for any λ, the function $z \mapsto \widetilde{\phi}(z, \lambda)$ has a critical point at $x_0(\lambda)$. From the Morse lemma, there exists a C^∞-diffeomorphism σ_λ near $x_0(\lambda)$, smoothly depending on λ, such that $z \mapsto \widetilde{\phi}(\sigma_\lambda(z), \lambda)$ is a quadratic function Q_λ of $z - x_0(\lambda)$. Moreover, without loss of generality, σ_λ is tangent to identity at x_0.

Since $\Re\phi$ is negative outside $x_0(\lambda)$, one can restrict the integral to a sufficiently small neighbourhood of $x_0(\lambda)$, up to an $O(N^{-\infty})$ small error. Hence, without loss of generality σ_λ is defined on V. However σ_λ may not preserve the real space U, so that the integral

$$\int_{y, \sigma_\lambda^{-1}(y+x_0(\lambda)) \in U} e^{NQ_\lambda(y)} \widetilde{a}(\sigma_\lambda^{-1}(y + x_0(\lambda), \lambda) J(y, \lambda) \mathrm{d}y$$

is not an integral on U. If $\widetilde{\phi}$ and $\widetilde{a}$ were holomorphic, one could simply change the integration contour. In this case, a change of contour induces an error related to $\overline{\partial}\widetilde{a}$ and $\overline{\partial}\sigma_\lambda$. This allows to conclude: since $\Re Q_\lambda < 0$ on $U \setminus \{x_0(\lambda)\}$, and σ_λ is tangent to identity at $x_0(\lambda)$, one has $\Re Q_\lambda(y) < 0$ for $y \neq x_0(\lambda)$ on the integration path. In particular one can reduce the integration domain to $\{|y - x_0| \leq N^{-\epsilon}\}$ up to an $O(N^{-\infty})$ error; on this domain (y, λ) is at distance $N^{-2\epsilon}$ of U, so that $\overline{\partial}\widetilde{a}$ and $\overline{\partial}\sigma_\lambda$ are $O(N^{-\infty})$.

We are then reduced to the case where ϕ is a quadratic form, which follows from an explicit computation. □

Remark 3.1.3. The critical point $x_0(\lambda)$ satisfies $\Re\phi(x_0(\lambda), \lambda) = 0$, which ensures that the quantity to integrate is not exponentially small at x_0. Since $\Re\phi \geq 0$ everywhere it implies that $x_0(\lambda)$ is a critical point for $\Re\phi$. In Lemma 3.1.2 we also impose the condition that $\Im\phi$ is critical at $x_0(\lambda)$ (otherwise a sequence of integration by parts would yield a $O(N^{-\infty})$ contribution).

This situation is not stable by small perturbations of ϕ, contrary to the real case: there might be no common critical point for $\Re\phi$ and $\Im\phi$ on U. In fact, under a small perturbation, the critical point of an almost holomorphic extension will move to the complex space, and is not well-defined any more since almost holomorphic extensions are not unique. This is a severe technical point in the treatment of Fourier Integral Operators with a complex phase, which can be addressed either by considering jets of Lagrangians along real submanifolds [MS75] or ideals of complex functions [Hör85], at an increased theoretical and practical cost. We will not need to build a comprehensive theory of Fourier Integral Operators with a complex phase but we will rather call "Fourier Integral Operators" some explicit parametrices (such as the one for the microlocal Szegő kernel) and apply the stationary phase lemma to conclude.

3.2 State of the art

Semiclassical expansions of S_N are derived in [Zel00; SZ02; MM07; Cha03; BBS08], in different settings, and using different tools. In [Zel00; SZ02], the Fourier Integral Operator approach is used to prove an asymptotic expansion of S_N in a neighbourhood of size $N^{-1/2}$ of a point. In [Cha03; MM07; BBS08], one derives asymptotic expansions of S_N in a neighbourhood of fixed size of a point, using the calculus of Fourier Integral Operators, heat kernel expansions, or simpler pseudodifferential tools.

The Szegő kernel on Kähler manifolds admits different generalisations, so we must give the context corresponding to a citation. In all this section, we call K the Kähler Szegö kernel defined in Section 2.2, AK the almost Kähler case [BS75; BG81; Zel00; SZ02; Chr03], SC the spin^c-Dirac case [BU96; MM02; MM07; MM08; MM15] and BL the Bochner Laplacians case [GU88; Kor17].

The Szegő kernel is rapidly decreasing away from the diagonal as $N \to +\infty$:

Proposition 3.2.1 ([BBS08](K), [SZ02; Cha03](AK), [MM07](SC), [Kor17](BL))**.** *For every $k \in \mathbb{N}$ and $\epsilon > 0$, there exists $C > 0$ such that, for every $N \in \mathbb{N}$, for every $x, y \in X$, if*

$$\operatorname{dist}(\pi(x), \pi(y)) \geq \epsilon,$$

then

$$|S_N(x, y)| \leq CN^{-k}.$$

The analysis of the Szegő kernel near the diagonal requires a convenient choice of coordinates. Let $P_0 \in M$. The real tangent space $T_{P_0}M$ carries a Euclidian structure and an almost complex structure coming from the Kähler structure on M. We then can (non-uniquely) identify $\mathbb{C}^n$ with $T_{P_0}M$.

Definition 3.2.2. Let U be a neighbourhood of 0 in $\mathbb{C}^n$ and V be a neighbourhood of P_0 in M. Let π denote the projection from X to M. Let $\mathbb{R}$ cover $\mathbb{S}^1$. The group action $r_\theta : \mathbb{S}^1 \to X$ lifts to a periodic action from $\mathbb{R}$ to X, which we will also call r_θ. A smooth diffeomorphism $\rho : U \times \mathbb{R} \to \pi^{-1}(V)$ is said to be a *normal map* or map of *normal coordinates* under the following conditions:

- $\forall z \in U$, $\forall \theta \in \mathbb{R}$, $\rho(z, \theta) = r_\theta \rho(z, 0)$;
- Identifying $\mathbb{C}^n$ with $T_{P_0}M$ as previously, and denoting $\exp : T_{P_0}M \mapsto M$ the geodesic flow starting at P_0, one has:

$$\forall (z, \theta) \in U \times \mathbb{R},\ \pi(\rho(z, \theta)) = \exp(z).$$

We will often read the kernel of S_N in normal coordinates. Let $P_0 \in X$ and ρ a normal map on X such that $\rho(0, 0) = P_0$. For $z, w \in \mathbb{C}^n$ small enough and $N \in \mathbb{N}$, let

$$S_N^{P_0}(z, w) := e^{-iN(\theta-\phi)} S_N(\rho(z, \theta), \rho(w, \phi)),$$

which does not depend on θ and ϕ as S_N is N-equivariant.

The following proposition states that, as $N \to +\infty$, in normal coordinates, the Szegő kernel has an asymptotic expansion whose first term is the flat kernel of equation (1) on page 19:

Proposition 3.2.3 ([BBS08](K), [Cha03; Del16](AK), [MM07](SC), [Kor17](BL)). *There exist $C > 0$, $C' > 0$, $m \in \mathbb{N}$, $\epsilon > 0$ and a sequence of polynomials $(b_j)_{j\geq 1}$, with b_j of same parity as j, such that, for any $N \in \mathbb{N}$, $K \geq 0$ and $|z|, |w| \leq \epsilon$, one has:*

$$\left| S_N^{P_0}(z,w) - \Pi_N(z,w)\left(1 + \sum_{j=1}^{K} N^{-j/2} b_j(\sqrt{N}z, \sqrt{N}w)\right)\right| \leq$$
$$CN^{n-(K+1)/2}\Big(1 + |\sqrt{N}z| + |\sqrt{N}w|\Big)^m e^{-C'\sqrt{N}|z-w|} + O(N^{-\infty}). \quad (4)$$

In the Kähler or almost Kähler setting, the estimate is in fact better:

Proposition 3.2.4 ([BBS08; Cha03](K), [Del16](AK)). *There exist $C > 0$, $C' > 0$, $m \in \mathbb{N}$, $\epsilon > 0$ and a sequence of polynomials $(b_j)_{j\geq 1}$, with b_j of same parity as j, such that, for any $N \in \mathbb{N}$, $K \geq 0$ and $|z|, |w| \leq \epsilon$, one has:*

$$\left| S_N^{P_0}(z,w) - \Pi_N(z,w)\left(1 + \sum_{j=1}^{K} N^{-j/2} b_j(\sqrt{N}z, \sqrt{N}w)\right)\right| \leq$$
$$CN^{n-(K+1)/2}\Big(1 + |\sqrt{N}z| + |\sqrt{N}w|\Big)^m e^{-C'N|z-w|^2} + O(N^{-\infty}). \quad (5)$$

Remark 3.2.5. Propositions 3.2.3 and 3.2.4 give asymptotics for the kernel of S_N, read in local coordinates. However, the normal maps of Definition 3.2.2 do not preserve the volume form, except infinitesimally on the fibre over P_0. For the associated operators to be preserved, one has to pull-back Schwartz kernels as half-forms. We claim that it does not change the structure of the asymptotics.

Indeed, if dVol is the volume form on X and $\mathrm{d}Leb$ is the Lebesgue form on $\mathbb{C}^n$, one has, for any normal map ρ:

$$\rho^*(\mathrm{d}Leb \otimes \mathrm{d}\theta) = a\,\mathrm{dVol},$$

for some function a on the domain of ρ with $a(0) = 1$. We want to study the asymptotics of $(z,w) \mapsto S_N^{P_0}(z,w)\sqrt{a(z)a(w)}$, which is the kernel of the pull-back of S_N.

The function $(z,w) \mapsto \sqrt{a(z)a(w)}$ is smooth on the domain of ρ. We write the Taylor expansion of this function at 0 as:

$$\sqrt{a(z)a(w)} = 1 + \sum_{j=1}^{K} a_j(z,w) + O(|z|^{K+1}, |w|^{K+1})$$

where a_j is homogeneous of degree j, so that $a_j(z,w) = N^{-j/2}a_j(\sqrt{N}z, \sqrt{N}w)$.

We let now $\widetilde{b}_j$ be such that

$$\left(1 + \sum_{j=1}^{K} N^{-j/2} b_j(\sqrt{N}z, \sqrt{N}w)\right)\left(1 + \sum_{j=1}^{K} N^{-j/2} a_j(\sqrt{N}z, \sqrt{N}w)\right)$$
$$= 1 + \sum_{j=1}^{K} N^{-j/2}\widetilde{b}_j(\sqrt{N}z, \sqrt{N}w) + O(N^{-(K+1)/2}).$$

Then

$$\left| S_N^{P_0}(z,w)\sqrt{a(z)a(w)} - \Pi_N(z,w)\left(1+\sum_{j=1}^{K} N^{-j/2}\widetilde{b}_j(\sqrt{N}z,\sqrt{N}w)\right)\right| \leq$$
$$CN^{n-(K+1)/2}\Big(1+|\sqrt{N}z|+|\sqrt{N}w|\Big)^m e^{-C'\sqrt{N}|z-w|} + O(N^{-\infty}).$$

Hence, the effects of the volume form can be absorbed in the error terms of equation (4), and Proposition 3.2.3 also holds when S_N is replaced by the corresponding half-form.

Thus, we can use the asymptotics of Proposition 3.2.3 to study how the operator S_N acts. For instance, we are able to refine Proposition 3.2.1:

Corollary 3.2.6. *For every $k \in \mathbb{N}$ and $\delta \in [0,1/2)$, there exists $C > 0$ such that, for every $N \in \mathbb{N}$, for every $x, y \in X$ with $\operatorname{dist}(\pi(x),\pi(y)) \geq N^{-\delta}$, one has:*

$$|S_N(x,y)| \leq CN^{-k}.$$

In particular, if $u \in L^2(X)$ is $O(N^{-\infty})$ outside the pull-back of a ball of size $N^{-\delta}$, then $S_N(u)$ is $O(N^{-\infty})$ outside the pull-back of a ball of size $2N^{-\delta}$.

3.3 Universality of the Bargmann model from an operator point of view

In the previously given local expansions of the Szegő kernel (4), the dominant term is the projector on the Bargmann spaces of equation (1) on page 19. Thus the Bargmann spaces appear to be a universal model for Hardy spaces, at least locally. To make this intuition more precise, we derive a useful proposition.

We can push forward by a normal map the kernel of the projector Π_N by the following formula:

$$\rho_*\Pi_N(\rho(z,\theta),\rho(w,\phi)) := e^{iN(\theta-\phi)}\Pi_N(z,w).$$

By convention, $\rho_*\Pi_N$ is zero outside $\pi^{-1}(V)^2$.

Proposition 3.3.1 (Universality)**.** *Let $\epsilon > 0$. There exists $\delta \in (0,1/2)$, a constant $C > 0$ and an integer N_0 such that, for any $N \geq N_0$, for any function $u \in L^2(X)$ whose support is contained in the fibres over a ball on M of radius $N^{-\delta}$, one has:*

$$\|(\rho_*\Pi_N)u - S_N u\|_{L^2(X)} \leq CN^{-1/2+\epsilon}\|u\|_{L^2(X)}.$$

Proof. Let again $S_N^{P_0} : (z,\theta,w,\phi) \mapsto e^{-iN(\theta-\phi)}S_N(\rho(z,\theta),\rho(w,\phi))$ denote the kernel S_N as read in local coordinates, which does not in fact depend on (θ,ϕ).

Equation (4), for $K = 0$, can be formulated as:

$$S_N^{P_0}(z,w) = \Pi_N(z,w) + R(z,w) + O(N^{-\infty}), \tag{6}$$

with

$$|R(z,w)| \leq CN^{n-1/2}(1+|\sqrt{N}z|+|\sqrt{N}w|)^m e^{-C'\sqrt{N}|z-w|}$$

for every z and w such that $(z,0)$ and $(w,0)$ belong to the domain of ρ.

Let $\delta \in (0,1/2)$ and u a function contained in the pull-back of a ball of size $N^{-\delta}$. Let

$$v = S_N u - (\rho_* \Pi_N) u.$$

Because of Corollary 3.2.6, v is $O(N^{-\infty})$ outside $\rho(B(0,4N^{-\delta}) \times \mathbb{S}^1)$. Hence, up to a $O(N^{-\infty})$ error, it is sufficient to control the kernel of $S_N - \rho_* \Pi_N$ on

$$\rho(B(0,4N^{-\delta}) \times \mathbb{S}^1) \times \rho(B(0,4N^{-\delta}) \times \mathbb{S}^1),$$

where equation (6) is valid.

It remains to estimate the norm of the operator with kernel R, using a standard result of operator theory:

Lemma 3.3.2 (Schur test)**.** *Let $k \in C^\infty(V \times V)$ be a smooth function of two variables in an open subset V of $\mathbb{R}^d$. Let K be the associated unbounded operator on $L^2(V)$.*

Let

$$\|k\|_{L^\infty L^1} := \max\left(\sup_{x \in V} \|k(x,\cdot)\|_{L^1(V)}, \sup_{y \in V} \|k(\cdot,y)\|_{L^1(V)} \right).$$

If $\|k\|_{L^\infty L^1}$ is finite, then K is a bounded operator. Moreover

$$\|K\|_{L^2(V) \mapsto L^2(V)} \leq \|k\|_{L^\infty L^1}.$$

Thus, we want to estimate the quantity:

$$\sup_{|z| \leq 4N^{-\delta}} \int_{|w| \leq 4N^{-\delta}} N^{n-1/2} (1 + |\sqrt{N} z| + |\sqrt{N} w|)^m e^{-C'|z-w|}.$$

After a change of variables and up to a multiplicative constant, it remains to estimate:

$$N^{-1/2} \sup_{|z| \leq 4N^{1/2-\delta}} \int_{|u| \leq 4N^{1/2-\delta}} (1 + |z| + |u|)^m e^{-C|u|}.$$

This quantity is $O(N^{(m-1)\frac{1}{2} - m\delta})$. Thus, for any $\epsilon > 0$, there exists δ such that the above quantity is $O(N^{-\frac{1}{2}+\epsilon})$.

By the Schur test, the L^2 norm of a symmetric kernel operator is controlled by the $L^\infty L^1$ norm of the kernel. When restricted on $B(0,4N^{-\delta})^2$, the kernel of $S_N^{P_0} - \Pi_N$ has a $L^\infty L^1$ norm of order $N^{-\frac{1}{2}+\epsilon}$, from which we can conclude. □

3.4 Improvement in the decay rate

This last section contains a proof of Proposition 3.2.4. As we already explained, the knowledge of the result is sufficient for the spectral study of Toeplitz operators.

In the setting of almost Kähler manifolds, we propose to show a different version of this estimate, with a somewhat stronger estimate on the remainder (see Proposition 3.4.8). We also replace the normal maps of Definition 3.2.2 with Heisenberg maps, satisfying different assumptions. This version could be of use in situations where it is crucial that the local map is a biholomorphism.

The proof relies on the theory of Fourier Integral Operators with complex-valued phase functions, in the sense of Hörmander ([Hör03], Section 7.8). Indeed, we will

follow the lines of [SZ02], which gives asymptotics at a shrinking scale; we modify the proof in order to estimate the remainder at a fixed scale, recovering results from [Cha03; BBS08].

The starting point in [SZ02] is the study by Boutet de Monvel and Sjöstrand [BS75] of the general Szegő projector (Definition 2.2.4). The structure of the Szegő projector, for the boundary of a relatively compact open set, has been subject to a thorough study [Koh63; Koh64; KR65; Bou74; BS75; BG81]. Under the assumption of *strong pseudo-convexity*, which is verified for the unit ball D of L^*, the boundary of D inherits a Riemannian metric from the Levi form (which is identical to the one we use here). The projector S is then a Fourier Integral Operator with complex phase, in the sense of Hörmander [Hör03]:

Proposition 3.4.1 ([BS75])**.** *Let Y be the boundary of a strongly pseudo-convex, relatively compact open set in a complex manifold. Then there exists a skew-symmetric almost holomorphic complex phase function $\psi \in C^\infty(Y \times Y)$ (in the sense of [Hör03]), whose critical set is* $\mathrm{diag}(Y)$*, and a classical symbol*

$$s \sim \sum_i t^{n-i} s_i \in C^\infty(Y \times Y \times \mathbb{R}^+),$$

such that the Schwartz kernel of the Szegő projector on Y is

$$S(x,y) = \int_0^{+\infty} e^{it\psi(x,y)} s(x,y,t)\mathrm{d}t + E(x,y),$$

where the function E is smooth. Moreover the principal symbol s_0 satisfies $s_0^2 = h_\psi^{-1}$, where $h_\psi(x,y)$ is the Hessian of the function

$$Y \times \mathbb{R}^+ \ni (z,\sigma) \mapsto \psi(x,z) + \sigma\psi(z,y)$$

at the critical point (which is unique and lies in a complex extension of $Y \times \mathbb{R}^+$).

In this setting, "almost holomorphic" means that, near the diagonal $z = w \in Y$, one has $\overline{\partial}_z \psi(z,w) = O(|z-w|^\infty)$.

The fact that the function $(z,\sigma) \mapsto \psi(x,z) + \sigma\psi(z,y)$ has exactly one critical point in the complex extension of $Y \times \mathbb{R}^+$, with nondegenerate Hessian, is encoded in the requirements on ψ to be a complex phase function in the sense of Hörmander.

If M is only almost complex, one can construct as in [BG81] a Szegő kernel on X satisfying the same assumptions as Proposition 3.4.1.

In the specific case where X is a circle bundle over M, one can use the microlocal information on S to deduce the asymptotics of its Fourier components S_N. Indeed, the N-th Fourier component of a smooth function on a compact set has a sup norm bounded by $O(N^{-\infty})$. Thus, one has

$$S_N(x,y) = \iint \exp(it\psi(x, r_\eta y) + iN\eta) s(x, r_\eta y, t)\mathrm{d}t\mathrm{d}\eta + E_N(x,y),$$

where $\|E_N\|_{L^\infty} = O(N^{-\infty})$. Here, as in the introduction, r_η denotes the circle action on X.

As announced, we will deal with a less restrictive class of local maps than the normal maps of Definition 3.2.2. Because we are dealing with exact Kähler manifolds, as opposed to the more general almost complex structure, we slightly modify the definition of [SZ02]:

Definition 3.4.2. Let $P_0 \in M$. Let U be a neighbourhood of 0 in $\mathbb{C}^n$ and V be a neighbourhood of P_0 in M.

A smooth diffeomorphism $\rho : U \times \mathbb{R} \to \pi^{-1}(V)$ is said to be an *Heisenberg map* or map of *Heisenberg coordinates* under the following conditions:

- $\pi(\rho(0,0)) = P_0$;
- $\rho^*\omega(P_0) = \omega_0(0)$.
- $\overline{\partial}_z \rho(z,v) = O(|z|^\infty)$.
- $\rho(m,\theta) = r_\theta \rho(m,0)$.

The crucial point is that, in these coordinates, the phase ψ from the Boutet-Sjöstrand theorem reads, for all (z,θ) and (w,ϕ) in the domain of ρ (cf. [SZ02], equation 61):

$$\psi(\rho(z,\theta),\rho(w,\phi)) = i\Big[1 - A(z,w)e^{i(\theta-\phi)}\Big],$$

Here, the 2-jet of A is known at the origin ([SZ02], Lemma 2.4):

$$A(z,w) = 1 - \frac{1}{2}|z-w|^2 + i\Im(z\cdot\overline{w}) + O(|z|^3,|w|^3).$$

We will need to control the off-diagonal behaviour of A. Recall

$$\Pi_1 : (z,w) \mapsto \frac{1}{\pi^n}\exp\Big(-\frac{1}{2}|z-w|^2 + i\Im(z\cdot\overline{w})\Big).$$

Up to a reduction of the definition set of ρ, the usual logarithm is well-defined, and we can define R_A as the unique function such that $A/\Pi_1 = \pi^n e^{R_A}$.

Proposition 3.4.3. *The two following estimates hold as $z,w \to 0$:*

$$\Re(R_A)(z,w) = O\big(|z-w|^2(|z|+|w|)\big)$$
$$\Im(R_A)(z,w) = O\big(|z-w|(|z|^2+|w|^2)\big).$$

In particular, up to a restriction of the Heisenberg map ρ to a smaller neighbourhood of P_0, one has, for every z and w in the domain of ρ:

$$|A/\Pi_1|(z,w) \le \pi^n e^{\frac{1}{4}|z-w|^2}. \tag{7}$$

Proof. The functions A and $\pi^n\Pi_1$ are equal up to order 2 at P_0, so that

$$R_A(z,w) = O(|z|^3,|w|^3).$$

The two functions A and $\pi^n\Pi_1$ are both smooth and are equal to 1 on the diagonal. Moreover the first derivatives of both $\Re(A)$ and $\Re(\Pi_1)$ vanish on the diagonal. For Π_1 this is a straightforward computation. For A it comes from the fact that ψ is a complex phase function whose critical set is the diagonal. It is also a natural consequence of the fact that $\partial_1 A(z,z) = -\frac{1}{2}\partial\phi(z)$ and $\overline{\partial}_1 A(z,z) = \frac{1}{2}\partial\phi(z)$, where ϕ is a complex potential: $i\partial\overline{\partial}\phi = \omega$. Hence there is a constant C such that, for every z and w in the domain of ρ, there holds:

$$|\Im(A - \pi^n\Pi_1)(z,w)| \le C|z-w|(|z|^2+|w|^2)$$
$$|\Re(A - \pi^n\Pi_1)(z,w)| \le C|z-w|^2(|z|+|w|).$$

From which we deduce that

$$\begin{aligned}|\Re((A-\pi^n\Pi_1)^2)(z,w)| &\leq C|z-w|^2(|z|+|w|)\\ |\Im((A-\pi^n\Pi_1)^2)(z,w)| &\leq C|z-w|^3\\ |A-\pi^n\Pi_1|^3 &\leq |z-w|^3.\end{aligned}$$

Now

$$R_A = \log(A/\pi^n\Pi_1) = \frac{A-\pi^n\Pi_1}{\pi^n\Pi_1} - \frac{1}{2}\left(\frac{A-\pi^n\Pi_1}{\pi^n\Pi_1}\right)^2 + O\left(\left(\frac{A-\pi^n\Pi_1}{\pi^n\Pi_1}\right)^3\right).$$

Taking the real and imaginary part of this equation, one deduces

$$\begin{aligned}\Re(R_A)(z,w) &= O\big(|z-w|^2(|z|+|w|)\big)\\ \Im(R_A)(z,w) &= O\big(|z-w|(|z|^2+|w|^2)\big).\end{aligned}$$

In particular,

$$|A/\Pi_1|(z,w) \leq \pi^n e^{C|z-w|^2(|z|+|w|)}.$$

Reducing the domain of the Heisenberg map ρ to a smaller neighbourhood of P_0, one gets, for every z and w in the domain of ρ:

$$|A/\Pi_1|(z,w) \leq \pi^n e^{\frac{1}{4}|z-w|^2}.$$

□

In fact, the symbol s of the operator can also be chosen to be very simple in the given coordinates:

Proposition 3.4.4. *In Heisenberg coordinates, the symbol s of S in proposition 3.4.1 can be chosen to be factorized as:*

$$s(\rho(z,\theta),\rho(w,\phi),t) = e^{-in(\theta-\phi)}\xi(z,w,t),$$

where

$$\xi(z,w,t) \sim \sum_{k=0}^{+\infty} t^{n-k}\xi_k(z,w)$$

and where each ξ_k is a smooth function. Moreover the principal symbol ξ_0 does not vanish in a neighbourhood of $\mathrm{diag}(M)$.

Proof. The expression of the phase ψ in local coordinates gives immediatly that any derivative of order ≥ 2 of the function $(t,z,\theta,w,\phi) \mapsto t\psi(\rho(z,\theta),\rho(w,\phi))$ is of the form $e^{i(\theta-\phi)}f(z,w,t)$ where f is constant or linear wrt t. It follows that $h_\psi(\rho(z,\theta),\rho(w,\phi)) = e^{2in(\theta-\phi)}g(z,w)$ for some function g. Hence, we can write $s_0(\rho(z,\theta),\rho(w,\phi)) = e^{-in(\theta-\phi)}\xi_0(z,w)$ for some smooth function ξ_0. Of course, any partial derivative of s_0 is also, in local coordinates, of the form $e^{-in(\theta-\phi)}f(z,w)$ for some function f.

Let us assume that for $k \leq K$, each function s_k reads in local coordinates as $e^{in(\theta-\phi)}\xi_k(z,w)$ for some smooth function ξ_k. The coefficient s_{K+1} can be derived

from $(s_i)_{i\leq K}$ via a stationary phase lemma, in which the differential operators come from the Taylor expansion of ψ. Thus, s_{K+1} is a priori of the form

$$s_{K+1}(\rho(z,\theta),\rho(w,\phi)) = e^{-in(\theta-\phi)}\left(\sum_{j=-C}^{C} e^{ik(\theta-\phi)}\xi_{K+1,j}(z,w)\right),$$

where C is finite (but depends on K) and the $\xi_{K+1,j}$ are smooth functions.

We can get rid of all coefficients except $j=0$ by adding a convenient multiple of ψ. Indeed, the operator with symbol $(f+\psi g)t^k$ is equal, after integration by parts, to the operator with symbol $ft^k + ikgt^{k-1}$, modulo a smoothing operator. For instance, replacing s_{K+1} with $s_{K+1} + e^{-i(\theta-\phi)}\xi_{K+1,1}a(z,w)\psi$ eliminates the $j=1$ term.

We conclude by induction. □

The N-th Fourier component S_N of the Szegő projector at a point (x,y) reads

$$S_N(x,y) = \iint \exp(it\psi(x,r_\eta y) + iN\eta)s(x,r_\eta y,t)\mathrm{d}t\mathrm{d}\eta + O(N^{-\infty}).$$

A change of variables leads to

$$S_N(x,y) = N\iint \exp(iN(t\psi(x,r_\eta y)+\eta))s(x,r_\eta y,Nt)\mathrm{d}t\mathrm{d}\eta + O(N^{-\infty}).$$

If x and y belong to different fibres, the phase $t\psi(x,r_\eta y)+\eta$ has no critical point, so $S_N(x,y) = O(N^{-\infty})$; this estimation is uniform outside a neighbourhood of $\pi^{-1}(\mathrm{diag}(M))$.

Using the local expression of the phase, one can derive as in [SZ02] an expression for S_N at a neighbourhood of size $N^{-1/2}$ of the diagonal. Let $\Omega_N \subset \mathbb{C}^n \times \mathbb{R}$ be the set of those (z,θ) such that $(z/\sqrt{N},\theta/N)$ belongs to the domain of ρ.

Proposition 3.4.5 ([SZ02], Theorem 3.1)**.** *There exists a sequence $(b_k)_{k\in\mathbb{N}}$ of polynomials on $\mathbb{R}^{4n}$, such that each b_k is of same parity as k, and a smooth function R_K on $\mathbb{C}^{2n}\times\mathbb{N}$, bounded on the compact sets of $\mathbb{C}^{2n}$ independently of the second variable, such that for all N, for all $(z,w,\theta,\phi)\in\Omega_N^2\times\mathbb{R}^2$, there holds*

$$\begin{aligned} N^{-n}e^{i(\phi-\theta)}S_N\left(\rho\left(\frac{z}{\sqrt{N}},\frac{\theta}{N}\right),\left(\frac{w}{\sqrt{N}},\frac{\phi}{N}\right)\right) \\ = \Pi_1(z,w)\left(1+\sum_{k=1}^{K} N^{-k/2}b_k(z,w,P_0) + N^{-(K+1)/2}R_K(z,w,N)\right) \\ + O(N^{-\infty}). \quad (8) \end{aligned}$$

Here, Π_1 is the kernel of the projector on the Bargmann space, as in equation (1) on page 19.

Remark 3.4.6. The next step is Proposition 3.4.8, an estimate for R_K that is valid in all of Ω_N^2. For this, we have to keep the $O(N^{-\infty})$ term outside.

In [SZ02], the $O(N^{-\infty})$ term is absorbed into R_K, without altering the property that R_K is bounded on compact sets independently on N. However, if an estimate such that the one in Proposition 3.4.8 did hold without the supplementary $O(N^{-\infty})$ term, then one could deduce exponential estimates for the off-diagonal of S_N, that

is, $|S_N(x,y)| \leq e^{-cN|x-y|^2}$ for some C. Such results are indeed known [BBS08] but cannot be obtained via the Boutet-Sjöstrand parametrix because the Boutet-Guillemin construction [BG81] adapts the Szegő kernel parametrix to the more general case of almost Kähler manifolds, where exponential estimates for the off-diagonal of S_N fail to hold [Chr13].

The method of proof for the last proposition can be in fact adapted to compute S_N in a fixed neighbourhood of a point on the diagonal, giving a result close to the Theorem 4.18 of [MM07], which also appears in [Cha03; BBS08]. Recall

$$S_N(x,y) = N \iint \exp(iN(t\psi(x, r_\eta y) + \eta))s(x, r_\eta y, Nt)\mathrm{d}t\mathrm{d}\eta + O(N^{-\infty}).$$

Replacing ψ and s by their expressions we get, after a change of variables,

$$\begin{aligned} &S_N(\rho(z,\theta), \rho(w,\phi)) \\ &\qquad = Ne^{iN(\theta-\phi)} \iint e^{-N(t(1-A(z,w)e^{i\eta})-i\eta)} e^{in\eta} \xi(z,w,Nt)\mathrm{d}t\mathrm{d}\eta + O(N^{-\infty}). \end{aligned}$$

We cannot use the stationary phase lemma, except if $z = w$, because the phase has no critical points. But ψ and s depend holomorphically on $e^{i\eta}$. Thus, we can replace this integral, which is a contour integral on the unit circle, with an integral on the circle of radius $|A(z,w)|$ in order to get a phase with a critical point. This corresponds to formally changing η into $\eta - i\log(|A(z,w)|)$ in the computations. The integral now reads

$$\begin{aligned} &S_N(\rho(z,\theta), \rho(w,\phi)) = \\ &\qquad NA(z,w)^N e^{iN(\theta-\phi)} \iint e^{-N(t(1-e^{i\eta})-i\eta)} e^{in\eta} \frac{\xi(z,w,Nt)}{A(z,w)^n} \mathrm{d}t\mathrm{d}\eta + O(N^{-\infty}). \end{aligned}$$

The last part of the product can now be computed using a stationary phase lemma, and the fact that ξ is a classical symbol. Hence, we recover a result similar to [MM07; Cha03; BBS08]:

Proposition 3.4.7. *There exists a neighbourhood V of $(\pi,\pi)^{-1}\operatorname{diag}(M)$ in $X \times X$ such that one has, in local Heisenberg coordinates around a point $P_0 \in \operatorname{diag}(X)$ with values in V, and for each integer K:*

$$\begin{aligned} &S_N(\rho(z,\theta), \rho(w,\phi)) \\ &\quad = N^n e^{iN(\theta-\phi)} A(z,w)^N \left(\sum_{j=0}^{K} N^{-j} B_j(z,w,P_0) + N^{-(K+1)} r_K(z,w,N,P_0) \right) \\ &\qquad\qquad + O(N^{-\infty}). \end{aligned} \tag{9}$$

Each B_j is smooth and B_0 is $\frac{1}{\pi^n}$ on the diagonal. Moreover, r_K is bounded in a compact subset of the domain of definition of ρ, independently of P_0 and N.

On the diagonal set, $B_0(z,z,P_0) = \dfrac{1}{\pi^n}$ because S_N is a projector.

Since, in a neighbourhood small enough of the diagonal, one has

$$|A(z,w)| \leq 1 - \frac{1}{4}|z-w|^2,$$

equation (8) can be deduced from equation (9). This way, we obtain an estimate on the remainder:

Proposition 3.4.8. *In the equation (8), there exist C and m such that the remainder R_K satisfies, for every N, for every z and w in Ω_N, the inequality:*

$$|R_K(z,w,N,P_0)| \leq Ce^{\frac{1}{4}|z-w|^2}(1+|z|^m+|w|^m).$$

Proof. Rescaling the formula (9) yields:

$$\begin{aligned}
&N^{-n}e^{i(\phi-\theta)}S_N\left(\rho\left(\frac{z}{\sqrt{N}},\frac{\theta}{N}\right),\left(\frac{w}{\sqrt{N}},\frac{\phi}{N}\right)\right)\\
&= A\left(\frac{z}{\sqrt{N}},\frac{w}{\sqrt{N}}\right)^N\left(\sum_{j=0}^{K}N^{-j}B_j\left(\frac{z}{\sqrt{N}},\frac{w}{\sqrt{N}}\right)+N^{-(K+1)}r_K\left(\frac{z}{\sqrt{N}},\frac{w}{\sqrt{N}},N\right)\right)\\
&\qquad\qquad + O(N^{-\infty})
\end{aligned}$$

The functions B_j are smooth, and r_K is bounded independently of N. Thus, applying a Taylor expansion at the origin, there exist polynomials b_j^s, and a function r_K^s with polynomial growth independent of N, such that

$$\begin{aligned}
&N^{-n}e^{i(\phi-\theta)}S_N\left(\rho\left(\frac{z}{\sqrt{N}},\frac{\theta}{N}\right),\left(\frac{w}{\sqrt{N}},\frac{\phi}{N}\right)\right)\\
&\quad= A\left(\frac{z}{\sqrt{N}},\frac{w}{\sqrt{N}}\right)^N\left(\sum_{j=0}^{2K+1}N^{-j/2}b_j^s(z,w)+N^{-(K+1)}r_K^s(z,w,N)\right)\\
&\qquad\qquad + O(N^{-\infty}). \qquad (10)
\end{aligned}$$

Let again R_A be such that $A(z,w)=\pi^n\Pi_1(z,w)e^{R_A(z,w)}$. We wish to control, for any integer N, the Taylor expansion at zero of

$$g_N : (z,w) \mapsto e^{NR_A\left(\frac{z}{\sqrt{N}},\frac{w}{\sqrt{N}}\right)}.$$

For every multi-index α, the derivative of degree α of g_N is a sum of terms of the form

$$e^{NR_A\left(\frac{z}{\sqrt{N}},\frac{w}{\sqrt{N}}\right)}\prod_{i=1}^{4n}N^{1-\frac{1}{2}|\beta_i|}\partial_i^{\beta_i}R_A\left(\frac{z}{\sqrt{N}},\frac{w}{\sqrt{N}}\right),$$

where each index β_i is nonzero and $\sum\beta_i=\alpha$.

Recall that A and $\pi^n\Pi_1$ coincide up to order 2 at the origin. In particular, the derivatives of order less than 2 of R_A vanish at the origin. It follows that a term of the form above is nonzero at the origin only if, for each $1\leq i\leq 4n$, there holds $\beta_i\geq 3$. In particular, for each α there holds

$$\partial^\alpha g_N(0,0)=O(N^{-|\alpha|/6}).$$

Moreover, $\partial^\alpha g_N(0,0)$ is always a polynomial in $N^{-1/2}$.

As we want to write an expansion with a remainder in $O(N^{-K-1})$, let us consider the Taylor expansion of g_N at order $6K+5$. To control the remainder, we make use again of the fact that R_A is smooth on a compact set and that

$$R_A(z,w)=O(|z|^3,|w|^3)$$

at the origin. If $\beta_i = 1$, then there is a constant C such that, for every (z, w) and every N, one has

$$\left|\partial_i^{\beta_i} R_A\left(\frac{z}{\sqrt{N}}, \frac{w}{\sqrt{N}}\right)\right| \leq CN^{-1}(|z|^2 + |w|^2).$$

Similarly, if $\beta_i = 2$, there exists a constant C such that, for every (z, w) and every N, one has

$$\left|\partial_i^{\beta_i} R_A\left(\frac{z}{\sqrt{N}}, \frac{w}{\sqrt{N}}\right)\right| \leq CN^{-1/2}(|z| + |w|).$$

If $\beta_i \geq 3$ we simply use the fact that the function $\partial_i^{\beta_i} R_A$ is bounded on its set of definition. It follows that for every α there exist m and C such that, for every N, for every $z, w \in \Omega_N$, one has

$$|\partial^\alpha g_N(z, w)| \leq CN^{-|\alpha|/6}(1 + |z|^m + |w|^m)|g_N(z, w)|.$$

Recall now from Proposition 3.4.3 that

$$|g_1(z, w)| \leq e^{\frac{1}{4}|z-w|^2}.$$

From the definition of g_N one deduces that

$$|g_N(z, w)| \leq e^{\frac{1}{4}|z-w|^2}.$$

Thus the Taylor expansion of g_N of order $6K + 5$ at the origin takes the following form:

$$g_N(z, w) = \sum_{j=0}^{2K+1} N^{-j/2} b_j^\psi(z, w) + N^{-K-1} r_K^\psi(z, w, N).$$

Here, the b_j^ψ are polynomials, and there exist C and m such that, for every z, w and every N, one has

$$|r_K^\psi(z, w, N)| \leq (1 + |z|^m + |w|^m)e^{-\frac{1}{4}|z-w|^2}.$$

We now return to equation (10). Replacing A with $\pi^n \Pi_1 e^{R_A}$, using the previous expression of g_N and expanding, we find equation (8) with the desired control of R_K. $\square$

4

EXPANSIONS AT THE BOTTOM OF WELLS

This chapter is devoted to a thorough study of the lowest eigenvalues and corresponding eigenvectors for a Toeplitz operator associated with a Morse function on a compact manifold. The methodology is standard in the Weyl framework: we proceed by perturbation of a model operator which has compact resolvent and unique first eigenvalue.

In Section 4.1 we write the basic definitions that we will use in this chapter, and state the main results. The first step is the study of Toeplitz operators associated with positive quadratic forms, which we discuss in Section 4.2. In the next chapter we will need properties of semipositive quadratic forms, which we also included in Section 4.2. A sequence of approximate ground states is constructed in Section 4.4, and excited states are studied in Section 4.5.

During the whole discussion, we use the "circle bundle" point of view on Toeplitz operators (see Subsection 2.2.3). The letter M will denote a quantizable compact Kähler manifold; X is the prequantum dual unit bundle over M (Definition 2.2.4). We rely on estimates on the Szegő kernel as presented in Chapter 3, which require local coordinates of a certain type: normal coordinates (Definition 3.2.2) or Heisenberg coordinates (Definition 3.4.2). During the different proofs, we only request from local coordinates that they should be adapted to expansions of the Szegő kernel. As such, the presented results adapt to different quantisation settings as presented in Section 2.5.

Different quantization schemes yield different subprincipal behaviours. When the Kähler structure or, more generally, the data needed for the studied quantization, vary, the Melin value 4.2.7 will change (see for instance remark 4.2.8), so that the selection rules will change.

This chapter roughly coincides with our article [Del16], with some elements from [Del17].

4.1 Morse functions on compact manifolds

In this chapter, we adapt the results from [HS84] to the setting of Kähler quantization. In particular, we are only interested in the following situation:

Definition 4.1.1. A function $h \in C^\infty(M)$ on a compact Kähler manifold M is said to *satisfy the wells condition* when the following is true:

- $\min(h) = 0$;
- Every critical point at which h vanishes is non-degenerate.

Observe that, by definition, Morse functions whose minimum is zero satisfy the wells condition, as does the square modulus of a generic holomorphic section of

$L^{\otimes N}$ for N large. Note that a function that satisfies the wells condition has a finite cancellation set.

We need the following definition to state our main theorems:

Definition 4.1.2. Let Z be a closed subset of M, and let

$$V_\delta(N) = \{(m, v) \in X, \operatorname{dist}(m, Z) > N^{-\delta}\}.$$

A sequence $(u_N)_{N\in\mathbb{N}}$ of norm 1 functions in $L^2(X)$ is said to *concentrate* on Z when, for every $\delta \in [0, \frac{1}{2})$, one has

$$\|u_N 1_{V_\delta(N)}\|_{L^2(X)} = O(N^{-\infty}).$$

Remark 4.1.3. Note that concentration, in the sense of the definition above, implies microlocalisation in the sense of Charles [Cha03], that is, for any open set V at positive distance from Z, as $N \to +\infty$, one has $\|u_N 1_V\|_{L^2} = O(N^{-\infty})$.

Indeed, if a sequence u concentrates on Z then Z contains its microsupport; reciprocally, if a sequence u has Z as microsupport, then u concentrates in any closed set Z' such that $Z \subset \mathring{Z}'$.

Note that, contrary to microsupporting, concentration does not behave well under infinite intersection: if a sequence u concentrates on any element of a family $(Z_i)_{i\in I}$, then the microsupport of u is contained in $\bigcap_I Z_i$ but the speed of convergence is not known.

If a non-negative function h vanishes with positive Hessian at $P \in M$, the 2-jet of h at P reads in normal or Heisenberg coordinates (Definitions 3.2.2 and 3.4.2) as a positive quadratic form $Q(P)$ on $\mathbb{C}^n$. The first eigenvalue μ of the Toeplitz operator $T_1(Q(P))$ (which we call *model quadratic operator*) does not depend on the choice of normal or Heisenberg coordinates (see Definition 4.2.7). We define this value to be $\mu(P)$. A formula for $\mu(P)$ will be derived in Proposition 4.2.6. It consists of two contributions: the trace of the quadratic form (with respect to the Riemannian structure), and the "symplectic trace" of the quadratic form. In Chapter 5, we will adapt the definition of $\mu(P)$ to account for a subprincipal symbol.

Let now h be a smooth function on M that satisfies the wells condition of Definition 4.1.1.

Theorem 4.1. *For every $N \in \mathbb{N}$, let λ_N be the first eigenvalue of the operator $T_N(h)$, and u_N an associated normalized eigenfunction. Then the sequence $(u_N)_{N\in\mathbb{N}}$ concentrates on the vanishing points of h on which μ is minimal.*

If there is only one such point P_0, then there is a real sequence $(a_k)_{k\geq 0}$ with $a_0 = \mu(P_0)$ such that, for each K, one has

$$\lambda_N = N^{-1} \sum_{k=0}^{K} N^{-k} a_k + O(N^{-K-2}).$$

Moreover, λ_N is simple for N large, and there exists $C > 0$ such that λ_N is the only eigenvalue of $T_N(h)$ in the interval $[0, N^{-1}(\mu(P_0) + C)]$.

Remark 4.1.4. Unlike Schrödinger operators [Hel88], the first eigenvalue of a Toeplitz operator can be degenerate for any value of N. Consider of instance the case $M = \mathbb{CP}^1 \simeq \mathbb{S}^2$ with coordinate functions x, y, z, and the Toeplitz operators $T_N(1 - z^2)$. In this case the quantum space is $\mathbb{C}_N[X]$, and the two elements 1 and X^N (which are the coherent states at the North and South pole) are eigenfunctions of this operator with minimal eigenvalue.

Theorem 4.2. *Let $C > 0$. There is a bounded number of eigenvalues (counted with multiplicity) of $T_N(h)$ in the interval $[0, CN^{-1}]$. More precisely, for $C' > C$, let K and $(b_k)_{1\leq k\leq K}$ be such that*

$$\{b_k,\, k \leq K\} = \bigcup_{\substack{P\in M\\ h(P)=0}} \mathrm{Sp}(T_1(q(P))) \cap [0, C']$$

with multiplicity. Then one can find $c > 0$ and a list of real numbers $(c_k)_{1\leq k\leq K}$ such that, for each k, one of the eigenvalues of $T_N(h)$ lies in the interval

$$[N^{-1}b_k + N^{-3/2}c_k - cN^{-2}, N^{-1}b_k + N^{-3/2}c_k + cN^{-2}].$$

Moreover, there are at most K eigenvalues of $T_N(h)$ in $[0, CN^{-1}]$ and each of them belongs to one of the intervals above.

Remark 4.1.5. In Theorem 4.1, only integer powers of N^{-1} remain in the expansion of the eigenvalue; this is due to parity properties, as the ground state of the model quadratic operator is always an even function.

In the general case of Theorem 4.2, however, the principal term of almost eigenfunctions need not be even or odd, because the model quadratic operator, may have eigenvalues of multiplicity more than one. This difficulty appears already when considering a single well (when $\{h = 0\}$ is a single point). The fact that wells might "resonate" (two model quadratic operators sharing an eigenvalue) does not obstruct our construction of quasimodes, which is local.

If the associated model quadratic operators have only simple eigenvalues, one can form a full expansion in integer powers of N^{-1} (as in Section 4.4). Quadratic forms satisfying this condition form a dense open subset of the space of positive quadratic forms. Hence, among symbols vanishing at order 2 on prescribed points, there is an open dense subset satisfying this non-resonance condition, for the topology of smooth functions on M.

4.2 Positive and semi-positive quadratic symbols

4.2.1 Symplectic classification of quadratic forms

Let us first give some details about the symplectic reduction of quadratic forms. In this chapter we need to analyze fixed, positive definite quadratic forms, which are an approximation of the behaviour of the symbol h near its minimal points under the wells condition. In Chapter 5, we will consider degenerate situations, where the quadratic form is semipositive definite and can depend on a parameter. We directly present the parameter-dependent situation, however we will not use Proposition 4.2.4 before Chapter 5.

Definition 4.2.1. Let (E, ω) be a linear symplectic space and Q be a semi-positive quadratic form on E. We let $\widetilde{Q} : E \to E^*$ be such that $[\widetilde{Q}(e)](f) = Q(e, f)$ for any $(e, f) \in E^2$. We also let $\widetilde{\omega} : E \to E^*$ be such that $[\widetilde{\omega}(e)](f) = \omega(e, f)$. Then, since ω is non-degenerate, $\widetilde{\omega}$ admits an inverse. The *symplectic eigenvalues* of Q are defined as the elements of

$$\sigma(i\widetilde{\omega}^{-1}\widetilde{Q}) \cap \mathbb{R}^+.$$

The concept of symplectic eigenvalues, that is, eigenvalues of a positive definite quadratic form relatively to a symplectic form, is akin to the notion of eigenvalues of a quadratic form relatively to a euclidian metric (if g is a scalar product on E, one can as above define the isomorphism $\widetilde{g} : E \mapsto E^*$ and consider $\sigma(\widetilde{g}^{-1}\widetilde{Q})$). In particular, the *symplectic trace* (sum of the symplectic eigenvalues with multiplicities) will play a decisive role in this Chapter and the following one, along with the usual trace (taken with respect to the standard Euclidian structure on $\mathbb{R}^{2n}$). The analogy is, however, uncomplete: while the trace of a quadratic form is easily computed, the symplectic trace admits no explicit formula.

We will need in Chapter 5 to reduce, as much as possible, quadratic forms which depend on a parameter. If a symmetric matrices depends smoothly on several parameters, it is in general not possible to diagonalise this matrices with smooth dependence in the parameters (this is only possible away from eigenvalue crossings). In our context, however, one can find a smooth way to reduce quadratic forms with respect to the symplectic form, so that the associated quantum ground state is fixed.

We begin with a statement of the result for families of positive quadratic forms.

Proposition 4.2.2. *Let $Q : \mathbb{R}^n \mapsto S_{2d}^{++}(\mathbb{R})$ be a smooth n-parameter family of positive quadratic forms.*

Then there is a smooth family $S : \mathbb{R}^n \mapsto Sp(2d)$ of symplectic matrices, a parameter family $U : \mathbb{R}^n \mapsto Sp(2d) \cap O(2d) \simeq U(d)$ of unitary matrices, and a family $(\lambda_1, \cdots, \lambda_d) : \mathbb{R}^d \mapsto (\mathbb{R}_+^*)^d$ of values such that, letting

$$(e_1, f_1, \cdots, e_d, f_d) = S(U(\textit{canonical basis})),$$

one has

$$Q(t)\left(\sum_{i=1}^{d} q_i e_i(t) + p_i f_i(t)\right) = \sum_{i=1}^{d} \lambda_i(t)(p_i^2 + q_i^2).$$

The symplectic eigenvalues of $Q(t)$ are the family $(\lambda_i(t))_{1\leq i\leq d}$.

In particular, for every $t \in \mathbb{R}^n$, the ground state of $T_1(Q(t) \circ S(t))$ is the standard Gaussian $z \mapsto \frac{N^d}{\pi^d} e^{-\frac{N|z|^2}{2}}$.

Proof. Let M be the matrix of Q in the (symplectic) canonical basis. Then $M^{\frac{1}{2}}$ is a smooth family of symmetric matrices, so that $M^{\frac{1}{2}} J M^{\frac{1}{2}}$ is a smooth family of antisymmetric matrices, where J is the matrix of the standard symplectic form in the canonical basis. Hence, there is a family V of orthogonal matrices, and a family V of positive diagonal matrices, such that

$$V^T M^{\frac{1}{2}} J M^{\frac{1}{2}} V = \begin{pmatrix} 0 & D \\ -D & 0 \end{pmatrix}.$$

Note that, in general, V and D do not depend continuously on M.

In particular, with $A = \begin{pmatrix} D^{-\frac{1}{2}} & 0 \\ 0 & D^{-\frac{1}{2}} \end{pmatrix}$, one has

$$(AV^T M^{\frac{1}{2}} J) M (-J M^{\frac{1}{2}} V A) = \begin{pmatrix} D & 0 \\ 0 & D \end{pmatrix} + O(t^\infty),$$

and

$$(AV^T M^{\frac{1}{2}} J) J (-J M^{\frac{1}{2}} V A) = J.$$

Hence, the matrix $-JM^{\frac{1}{2}}VA$ corresponds to a linear symplectic change of variables under which Q is diagonal. It remains to write this matrix as SV, where S depends smoothly on the parameters and $V \in U(n)$. Under such a decomposition, one has $SS^T = -JM^{\frac{1}{2}}VA\Big(-JM^{\frac{1}{2}}VA\Big)^T$, and

$$JM^{\frac{1}{2}}VAAV^TM^{\frac{1}{2}}J^T = -JM^{\frac{1}{2}}V\begin{pmatrix} D^{-1} & 0 \\ 0 & D^{-1}\end{pmatrix}V^TM^{\frac{1}{2}}J.$$

From the definition of D, there holds

$$\begin{aligned}\begin{pmatrix} D^{-1} & 0 \\ 0 & D^{-1}\end{pmatrix} = \begin{pmatrix} D^{2} & 0 \\ 0 & D^{2}\end{pmatrix}^{-\frac{1}{2}} &= \Big(-V^TM^{\frac{1}{2}}JMJM^{\frac{1}{2}}V\Big)^{-\frac{1}{2}} \\ &= V^T\Big(-M^{\frac{1}{2}}JMJM^{\frac{1}{2}}\Big)^{-\frac{1}{2}}V.\end{aligned}$$

Hence,

$$JM^{\frac{1}{2}}VAAV^TM^{\frac{1}{2}}J^T = -JM^{\frac{1}{2}}\Big(-M^{\frac{1}{2}}JMJM^{\frac{1}{2}}\Big)^{-\frac{1}{2}}M^{\frac{1}{2}}J.$$

We set

$$S = \left[-JM^{\frac{1}{2}}\Big(-M^{\frac{1}{2}}JMJM^{\frac{1}{2}}\Big)^{-\frac{1}{2}}M^{\frac{1}{2}}J\right]^{\frac{1}{2}}.$$

Then S depends smoothly on M since the square root is a smooth function on the set of positive quadratic matrices. It is symplectic (as the square root of a symmetric symplectic matrix), and by construction $(-JM^{\frac{1}{2}}VA)^{-1}S \in Sp(2n) \cap O(2n)$ is unitary.

To conclude the proof, we first observe that

$$\sigma(M(0)^{\frac{1}{2}}JM(0)^{\frac{1}{2}}) = \sigma(JM(0)) = \{\pm i\lambda_j(0),\, 1 \le j \le d\}$$

coincides with the construction of Definition 4.2.1.

Second, the standard Gaussian $z \mapsto \frac{N^d}{\pi^d}e^{-\frac{N|z|^2}{2}}$ is the ground state of $T_N(Q\circ S\circ U)$, and unitary change of variables act in a simple way on Toeplitz quantization:

$$T_N(Q \circ S \circ U) = U^{-1}T_N(Q \circ S)U.$$

Here U acts on elements in B_N by a change of variables.

Since the standard Gaussian is invariant under unitary change of variables, if follows that it is the ground state of $T_N(Q\circ S)$, independently on the parameter. □

We recall that the rank of a quadratic form Q is the maximum dimension of a subspace on which Q is non-degenerate; it coincides with the rank of the associated linear map $\widetilde{Q} : E \to E^*$.

Definition 4.2.3. Let E be a real vector space and ω a real antisymmetric form on E. As in Definition 4.2.1, let $\widetilde{\omega} : E \mapsto E*$ be such that $[\widetilde{\omega}(e)](f) = \omega(e, f)$ for $(e, f) \in E^2$.

The *symplectic rank* of (E, ω) is the rank of $\widetilde{\omega}$. In particular, if (E, ω) is a symplectic linear space, the symplectic rank of a linear subspace F is the rank of the restricted map $\widetilde{\omega} : F \mapsto F^*$.

Proposition 4.2.4. *Let $Q : \mathbb{R}^d \mapsto S^+_{2n}(\mathbb{R})$ be a smooth d-parameter family of semi-positive quadratic forms. Suppose rank Q is constant and suppose that the space $\ker Q$ has constant symplectic rank.*

let $2r_1$ be the symplectic rank of $\ker Q$ and $2r_1 + r$ be the dimension of $\ker Q$.

Then there is a smooth d-parameter family $S : \mathbb{R}^d \mapsto S^+_{2n}(\mathbb{R})$ of symplectic matrices, a d-parameter family $U : \mathbb{R}^d \mapsto U(n - r - r_1)$ of unitary matrices, and a d-parameter family $(\lambda_{r_1+r+1}, \cdots, \lambda_n) : \mathbb{R}^d \mapsto \mathbb{R}^{n-r-r_1}$ such that, letting

$$U(n) \ni U' = \begin{pmatrix} Id & 0 \\ 0 & U \end{pmatrix}$$
$$(e_1, f_1, \cdots, e_n, f_n) = S(U'(\textit{canonical basis})),$$

one has

$$Q(t)\left(\sum_{i=1}^{n} q_i e_i(t) + p_i f_i(t)\right) = \sum_{i=r_1+1}^{r_1+r} p_i^2 + \sum_{i=r_1+r+1}^{n} \lambda_i(t)(p_i^2 + q_i^2).$$

In the study of the Hamiltonian dynamics related to Q, the vectors f_i for i ranging from r_1+1 to r_1+r are called *slow modes*. They correspond to the motion of a free particle. The vectors (e_i, f_i), for i ranging from r_1+r+1 to n, are called *fast modes* and correspond to harmonic oscillations. Elements in the kernel of Q are called *zero modes*.

As before, the symplectic eigenvalues of Q are the λ_j's, as well as 0 if Q is degenerate.

Proof. Let us construct a symplectic basis $(e_1, \ldots, e_n, f_1, \ldots, f_n)$ of $\mathbb{R}^{2n}$, depending smoothly on the parameters, on which the quadratic form Q is diagonal up to an action of $U(n - r_1 - r)$ on the last variables. We first can reduce to the case where $\ker Q$ is isotropic. Indeed, let Σ denote a smooth family of symplectic subspaces such that $\Sigma \subset \ker Q$ and $\ker Q/\Sigma$ is isotropic. The existence of such a smooth family is guaranteed by the fact that $\ker Q$ has constant dimension and constant symplectic rank.

In any symplectic basis adapted to Σ, the matrix of the quadratic form Q takes the form

$$\begin{pmatrix} 0 & 0 \\ 0 & M \end{pmatrix},$$

and it remains to study the quadratic form on $\mathbb{R}^{2n}/\Sigma$.

From now on we suppose that $\ker Q$ isotropic, and we set $r = \dim \ker Q$. We proceed by induction: if Q is degenerate, we construct the first pair (e_1, f_1) with $e_1 \in \ker Q$, hence the reduction to Q' on $\mathbb{R}^{2(n-1)}$ with $\dim \ker Q' = r - 1$. If Q is non-degenerate, we conclude using Proposition 4.2.2.

Suppose $r > 0$. Pick $e_1 \in \ker Q$ smoothly depending on the parameters. The quadratic form Q is degenerate, but it is a well-known fact that it has no co-isotropic subspaces: if a subspace F is such that

$$\{e \in \mathbb{R}^{2n}, \forall f \in F, Q(e + f) = Q(e) + Q(f)\} \subset F,$$

then $F = \mathbb{R}^{2n}$.

Hence, with $F = \{z \in \mathbb{R}^{2n}, \langle z, Je_1\rangle = 0\}$ denoting the symplectic orthogonal of e_1, there exists f_1 such that:

$$\langle e_1, Jf_1\rangle = 1$$
$$\forall z \in F,\ Q(z + f_1) = Q(z) + Q(f_1).$$

The vector f_1 again depends smoothly on the parameters. As $\lambda = Q(f_1)$ is far from zero on compact sets (recall that $\ker Q$ is a continuous family of isotropic subspaces), changing e_1 into $\sqrt{\lambda}e_1$ and f_1 into $f_1/\sqrt{\lambda}$ yields two smooth vectors with the supplementary condition that $Q(f_1) = 1$.

If one can find a smooth symplectic basis $(e_2, \dots, e_n, f_2, \dots, f_n)$ of the symplectic orthogonal of $\mathrm{span}(e_1, f_1)$, which diagonalises the restriction of Q with diagonal values as above, then completing this basis with e_1 and f_1 concludes the proof.

If $r = 0$, we are reduced to Proposition 4.2.2. □

4.2.2 Spectral theory of (semi-)positive quadratic symbols

Let us make more precise the discussion on quadratic symbols in Subsection 2.1.3.

Recall that $\mathcal{B}_N$ is the N-th Bargmann transform.

Proposition 4.2.5. *Let Q be a quadratic form in $\mathbb{R}^{2n}$, identified with $\mathbb{C}^n$. Then $T_N(Q)$ can be defined as an unbounded operator on the domain*

$$\{f \in \mathcal{B}_N, |z|^2 f \in L^2(\mathbb{C}^n, \mathbb{C})\}.$$

One has

$$\mathcal{B}_N T_N(Q)\mathcal{B}_N^{-1} = Op_W^{N^{-1}}(Q) + N^{-1}\frac{\mathrm{tr}(Q)}{4}.$$

In particular, if $Q \geq 0$ is non-zero, then the infimum of the spectrum of $T_N(Q)$ is positive.

Proof. The set

$$\{f \in \mathcal{B}_N, |z|^2 f \in L^2(\mathbb{C}^n, \mathbb{C})\}.$$

is a dense subspace of B_N, since it contains all elements of the standard Hilbert basis (given by monomials times the standard Gaussian). For elements f in this space, one can indeed make sense of $\Pi_N(Qf)$ as elements of B_N. Note that this might not correspond to the maximal domain of $T_N(Q)$ if Q has zero eigenvalues.

The conjugation of polynomial symbols by the Bargmann transform belongs to the folklore on the topic; we present them for the sake of completeness.

It is sufficient to consider the $N = 1$ case which is conjugated with the general case through the usual scaling: indeed $Op_W^{N^{-1}}(Q)$ is conjugated with $N^{-1}Op_W^1(Q)$.

Recall that the Bargmann transform sends the basis of eigenfunctions of the harmonic oscillator in the Fock model, to the basis of eigenfunctions for the Weyl harmonic oscillator. In particular, the Bargmann transform preserves the creation and annihilation operators, so that

$$\mathcal{B}_N T_N(z_j)\mathcal{B}_N^{-1} = x_j + \partial_j$$
$$\mathcal{B}_N T_N(\overline{z_j})\mathcal{B}_N^{-1} = x_j - \partial_j$$

Here we shorten the notations for the momentum operators: on the Bargmann side, we let $\mathfrak{d}_j = \partial_{z_j} + \frac{1}{2}\overline{z_j}$; on the $\mathbb{R}^n$ side, we let $D_j = \frac{1}{i}\frac{\partial}{\partial x_j}$.

Let j, k be two indices in $[|1, n|]$.

If $Q : z \mapsto z_j z_k = (x_j + iy_j)(x_k + iy_k)$, then $\mathrm{tr}(Q) = 0$, so the two operators should coincide. $T_1(Q)$ is the operator of multiplication by $z_j z_k$. This operator is conjugated via $\mathcal{B}_1$ to the operator $(x_j + iD_j)(x_k + iD_k) = x_j x_k - D_j D_k + ix_j D_k + iD_j x_k$. Moreover, the Weyl quantization of Q is the operator

$$Op^1_W(Q) = x_j x_k - D_j D_k + \frac{i}{2}(D_k x_j + x_j D_k + D_j x_k + x_k D_j).$$

These two operators coincide whether $j = k$ or not.

The case $Q : z \mapsto \overline{z_j z_k} = (x_j - iy_j)(x_k - iy_k)$ is the adjoint of the previous one.

If $Q : z \mapsto z_j \overline{z_k} = (x_j + iy_j)(x_k - iy_k)$, then $\mathrm{tr}(Q) = 2\delta^j_k$. In that case, $T_1(Q) = \mathfrak{d}_k z_j$. This operator is conjugated to $(x_k - iD_k)(x_j + iD_j)$. The Weyl quantization of Q is

$$Op^1_W(Q) = x_j x_k + D_j D_k + \frac{i}{2}(-D_k x_j - x_j D_k + D_j x_k + x_k D_j).$$

The two operators coincide when $k \neq j$, and when $k = j$ the difference is $\frac{1}{2}$.

From the conjugation, it is clear that the first eigenvalue of $T_N(Q)$ is positive, because the Weyl quantization of the nonnegative quadratic form Q is nonnegative and $\mathrm{tr}(Q) > 0$. □

Using Propositions 4.2.5 and 4.2.4, one can characterise the infimum of the spectrum of the Toeplitz quantization of a quadratic symbol:

Proposition 4.2.6. *Let $Q \geq 0$ be a semipositive quadratic form in $\mathbb{R}^{2n}$, identified with $\mathbb{C}^n$. Let $\lambda_1, \ldots, \lambda_J$ denote the symplectic eigenvalues of Q with multiplicities. Then*

$$\min \mathrm{Sp}(T_N(Q)) = N^{-1}\left(\frac{1}{2}\sum_{j=1}^{J}\lambda_j + \frac{\mathrm{tr}\, Q}{4}\right).$$

Proof. We recall that the spectrum of a pseudodifferential operator associated with a quadratic form is invariant by linear symplectic changes of coordinates. Indeed, they are invariant by the following list of linear symplectic changes of coordinates, which generate $Sp(2n)$:

- The matrix $J = \begin{pmatrix} 0 & I \\ -I & 0 \end{pmatrix}$ (by a Fourier transform).
- Matrices of the form $\begin{pmatrix} A & 0 \\ 0 & A^{-1} \end{pmatrix}$. (by linear change of coordinates on $L^2(\mathbb{R}^n)$.
- Matrices of the form $\begin{pmatrix} I & A \\ 0 & I \end{pmatrix}$ with A symmetric (by multiplication by $e^{i\langle x, Ax\rangle}$).

In particular, the spectrum of $Op^1_W(Q)$ only depends on the symplectic normal form of Q. From Proposition 4.2.4, we reduce ourselves to the case:

$$Op^1_W(Q) = -\sum_{i=r_1+1}^{r_1+r}\Delta_{x_i} + \sum_{i=r_1+r+1}^{n}\lambda_i(-\Delta_{x_i} + x_i^2).$$

In this setting the infimum of the spectrum is half the sum of the λ_i's.

We conclude using Proposition 4.2.5. □

Definition 4.2.7. The *Melin value* associated with a semipositive quadratic form Q is:

$$\mu(Q) := \min \mathrm{Sp}(T_1(Q)).$$

Remark 4.2.8. In Proposition 4.2.5, it appears that the Melin value is not a symplectic invariant. In particular, operators associated with the symbol

$$(q,p) \mapsto \lambda p^2$$

for $\lambda > 0$, do not share the same spectrum. This contrasts with Weyl quantization, where operators of the form $-\lambda\Delta$ have spectrum $[0,+\infty)$ for any $\lambda > 0$.

Proposition 4.2.9. *Let Q be a positive quadratic form. Then $T_N(Q)$ has compact resolvent, and its first eigenvalue is simple.*

Proof. Using Propositions 4.2.2 and 4.2.5, we reduce ourselves to the spectral study of the operator $-\Delta + V$ acting on $L^2(\mathbb{R}^n)$, where V is a positive quadratic function. This operator has compact resolvent, and the first eigenvalue is simple since V is bounded from below (by zero). □

In the Weyl setting, the image of the resolvent of $-\Delta + V$ is a weighted Sobolev space; it also preserves the Schwartz space. In the next subsection, we will analyze the image of the Schwartz space by the Bargmann transform.

The regularity of the map μ will be useful in the proof of Theorem 4.1:

Proposition 4.2.10 ([Mel71])**.** *The function $Q \mapsto \mu(Q)$ is Hölder continuous with exponent $\frac{1}{2n}$ on the set of semi-definite positive quadratic forms of dimension $2n$.*

4.2.3 Schwartz functions on the Bargmann space

In this subsection we give the key properties for a convenient space of test functions within the Bargmann space $\mathcal{B}_1$.

Proposition 4.2.11. *Let Q be a positive definite quadratic form on $\mathbb{R}^{2n}$, identified with $\mathbb{C}^n$. Let $(\phi_k)_{k\geq 0}$ denote an Hilbert spectral basis for $T_1(Q)$ with increasing eigenvalues. Then all spaces below coincide:*

- $\mathcal{D}^{(1)} = \mathcal{S}(\mathbb{C}^n) \cap B_1$.
- $\mathcal{D}^{(2)} = \mathcal{B}_1^*(\mathcal{S}(\mathbb{R}^n))$.
- $\mathcal{D}^{(3)} = \{\sum_{k=0}^{+\infty} \alpha_k \phi_k,\ \alpha_k = O(k^{-\infty})\}$.

Proof. Let us prove first that $\mathcal{D}^{(1)} = \mathcal{D}^{(2)}$.

Let $u \in \mathcal{S}(\mathbb{C}^n) \cap B_1$; let us prove that $\mathcal{B}_1 u \in \mathcal{S}(\mathbb{R}^n)$.

Let $P \in \mathbb{C}[x,\xi]$ be a polynomial on $\mathbb{R}^{2n}$. Then, by (3), one has

$$B_1^* Op_1^W(P) B_1 = T_1(\widetilde{P}), \qquad \widetilde{P} = \sum_{k=0}^{+\infty} \frac{\Delta^k}{k!} P \in \mathbb{C}[z].$$

Since $T_1(\widetilde{P})$ is a finite sum of differential operators of the form $\mathfrak{d}^\alpha z^\beta$, one has $T_1(\widetilde{P})u \in B_1$, so that $Op_1^W(P)B_1u \in L^2(\mathbb{R}^n)$.

Since for all $P \in \mathbb{C}[x,\xi]$ one has $Op_1^W(P)B_1u \in L^2(\mathbb{R}^n)$, one can conclude that $B_1u \in \mathcal{S}(\mathbb{R}^n)$.

The reciprocal $\mathcal{D}^{(2)} \subset \mathcal{D}^{(1)}$ proceeds along the same lines.

We now pass to the proof of $\mathcal{D}^{(1)} = \mathcal{D}^{(3)}$. The operator $T_N(Q)$ is diagonal in the Hilbert basis $(\phi_k)_{k\geq 0}$, with sequence of eigenvalues $\lambda_0 < \lambda_1 \leq \lambda_2 \leq \cdots$. By the Weyl law, there holds $\lambda_k = O(k^{\frac{1}{d}})$.

If $u = \sum_{k=0}^{+\infty} \alpha_k \phi_k \in \mathcal{D}^{(1)}$, then in particular $Op(Q)^M u \in B_1$ for every $M \in \mathbb{N}$, so that

$$\sum |\alpha_k \lambda_k^M|^2 < +\infty$$

for every $M \geq 0$. In particular, $\alpha_k = O(k^{-\infty})$.

If reciprocally $u \in \mathcal{D}^{(3)}$ then $Op(Q)^M u \in B_1$ for every $M \in \mathbb{N}$. In particular, for every $P \in \mathbb{C}[z,\overline{z}]$, one has $\langle u, Pu\rangle < +\infty$.

Let $k \in \mathbb{N}^n$. The choice $P = |z_1|^{2k_1}|z_2|^{2k_2}\dots|z_n|^{2k_n} =: |z|^{2k}$ yields

$$\langle u, \overline{z}^k z^k u\rangle = \|z^k u\|_{L^2}^2 < +\infty,$$

so that $z^k u \in B_1$.

Recall that $\mathfrak{d} = T_N(\overline{z})$ is the adjoint of z as acting on B_1, with $[\mathfrak{d}, z] = \mathrm{Id}$. Let us prove that, for all $(k,\ell) \in \mathbb{N}^{2n}$, one has $\mathfrak{d}^\ell z^k u \in B_1$. We proceed by double induction and assume that the result is true for all $k' \leq k$ and $\ell' \leq \ell$, as well as for any (k',ℓ') such that $k' + \ell' = k + \ell$ and $\ell' \leq \ell$. We now write

$$\|\mathfrak{d}^\ell z^k u\|_{L^2}^2 = \langle u, \mathfrak{d}^k z^\ell \mathfrak{d}^\ell z^k u\rangle.$$

If $\ell = 0$ we already know that the result holds, otherwise we let $1 \leq j \leq n$ be such that $\ell_j > 0$ and we let $\eta_j = (0,\dots,0,1,0,\dots,0)$ be the base polyindex with a 1 at site j. Then $z^\ell = z^{\ell-\eta_j} z_j$ and similarly $\mathfrak{d}^\ell = \mathfrak{d}_j \mathfrak{d}^{\ell-\eta_j}$. Since $[z_j, \mathfrak{d}_j] = -1$, there holds

$$\langle u, \mathfrak{d}^k z^\ell \mathfrak{d}^\ell z^k u\rangle = \langle u, \mathfrak{d}^k z^{\ell-\eta_j} \mathfrak{d}_j z_j \mathfrak{d}^{\ell-\eta_j} z^k u\rangle - \langle u, \mathfrak{d}^k z^{\ell-\eta_j} \mathfrak{d}^{\ell-\eta_j} z^k u\rangle.$$

The second term of the right-hand side is finite by hypothesis. It remains to control

$$\langle u, \mathfrak{d}^k z^{\ell-\eta_j} \mathfrak{d}_j z_j \mathfrak{d}^{\ell-\eta_j} z^k u\rangle$$

to which end we use that $[z^{\ell-\eta_j}, \mathfrak{d}_j] = -(\ell_j - 1) z^{\ell-2\eta_j}$. Hence,

$$\langle u, \mathfrak{d}^k z^{\ell-\eta_j} \mathfrak{d}_j z_j \mathfrak{d}^{\ell-\eta_j} z^k u\rangle = \langle u, \mathfrak{d}^{k+\eta_j} z^{\ell-\eta_j} z_j \mathfrak{d}^{\ell-\eta_j} z^k u\rangle - (\ell_j - 1)\langle u, \mathfrak{d}^k z^{\ell-\eta_j} \mathfrak{d}^{\ell-\eta_j} z^k u\rangle.$$

Again the second term of the right-hand side is finite, and we can further swap

$$\begin{aligned}\langle u, \mathfrak{d}^{k+\eta_j} z^{\ell-\eta_j} z_j \mathfrak{d}^{\ell-\eta_j} z^k u\rangle &= \langle u, \mathfrak{d}^{k+\eta_j} z^{\ell-\eta_j} \mathfrak{d}^{\ell-\eta_j} z^{k+\eta_j} u\rangle \\ &\quad - (\ell_j - 1)\langle u, \mathfrak{d}^{k+\eta_j} z^{\ell-\eta_j} \mathfrak{d}^{\ell-2\eta_j} z^k u\rangle,\end{aligned}$$

where the second-term of the right-hand side is finite.

In particular, $\|\mathfrak{d}^\ell z^k u\|_{L^2}^2$ is equal to $\|\mathfrak{d}^{\ell-\eta_j} z^{k+\eta_j} u\|_{L^2}^2$ plus a finite sum of finite terms, so that, by induction, $\|\mathfrak{d}^\ell z^k u\|_{L^2}^2 < +\infty$. This concludes the proof. $\square$

We will call $\mathcal{D}$ the space described in the last Proposition. It is a limit of spaces of the form

$$\mathcal{H}^k = \{u \in B_1, \forall P \in \mathbb{C}^{2k}[z], \langle u, Pu\rangle < +\infty\}.$$

The spaces $\mathcal{H}^k$ are isomorphic to isotropic Sobolev spaces as presented in Chapter 4 of [Mel07].

The third description of $\mathcal{D}$, and the uniqueness of the first eigenvalue (Proposition 4.2.9) together yield the following property.

Proposition 4.2.12. *Let Q be a positive quadratic form on $\mathbb{R}^{2n}$ identified with $\mathbb{C}^n$. Let u denote the ground state of $T_1(Q)$.*

Then the space $\{v \in \mathcal{D}, v \perp u\}$ is stable by $(T_1(Q) - \mu(Q))^{-1}$.

4.3 General localisation results

Using the symbolic calculus of Toeplitz operators, one can prove two fairly general localization results.

In this chapter we only study the spectral theory of operators of the form $T_N(h)$ where $h \in C^\infty(M, \mathbb{R})$ is independent of N. In Chapter 5, in order to consider applications to spin systems, we will need to consider *classical symbols*, which admit an expansion of the form

$$h : N \mapsto \sum_{k=0}^{+\infty} N^{-k} h_k + O(N^{-\infty}),$$

where each h_k is a smooth $\mathbb{R}$-valued function on M. Given any sequence $(h_k)_{k\geq 0}$ of smooth functions on M, on can build h as above by a Borel summation. In particular, in this section, h will denote a classical symbol (whereas in the rest of this chapter, h is a smooth function).

Proposition 4.3.1. *Let $h = \sum_{k=0}^{+\infty} N^{-k} h_k + O(N^{-\infty})$ be a classical symbol on M with $h_0 \geq 0$. Suppose that h_0 vanishes exactly at order 2 on $Z = \{h_0 = 0\}$, that is, there exists $c > 0$ such that $h_0 \geq c\,\mathrm{dist}(\cdot, Z)^2$.*

Let $t > 0$, and define

$$V_t := \{(m, v) \in X, \mathrm{dist}(m, Z) < t\}.$$

For every $k \in \mathbb{N}$, there exists $C > 0$ such that, for every $N \in \mathbb{N}$, for every $t > 0$, and for every $u \in H_N(X)$ such that $T_N(h)u = \lambda u$ for some $\lambda \in \mathbb{R}$, one has

$$\|u 1_{X\setminus V_t}\|_{L^2}^2 \leq C \left(\frac{\max(\lambda, N^{-1})}{t^2}\right)^k \|u\|_{L^2}^2.$$

Remark 4.3.2. Here M is a Kähler manifold, so dist is the Riemannian distance, but since M is compact, the condition on h does not depend on the chosen Riemannian structure.

Proof. Without loss of generality, we restrict ourselves to the case where $h_1 \geq 2$ on M. Indeed if the result holds for $T_N(h)$, it clearly holds for $T_N(h) - CN^{-1}$, for any $C > 0$.

From Proposition 2.3.5 and by induction on $k \in \mathbb{N}$, the k-th power of $T_N(h)$ is of the form

$$T_N(h)^k = T_N(h^{\star k}) = T_N(h^k + N^{-1}C_{1,k}(h, \cdots, h) + N^{-2}C_{2,k}(h, \cdots, h) + \ldots),$$

where $C_{i,k}$ is a k-multilinear differential operator of order at most $2i$.

We want to study $C_{i,k}(h, \cdots, h)$ for $i \leq k$. The function h_0 is smooth and nonnegative, hence $\sqrt{h_0}$ is a Lipschitz function; in other terms, there exists C such that, for every $(x, \xi) \in TM$ with $\|\xi\| \leq 1$, one has $|\partial_\xi h_0(x)| \leq C\sqrt{h_0(x)}$. (see Lemma 4.31 "Gradient estimate" in [Zwo12].) In local coordinates, the function $C_{i,k}(h, \cdots, h)$ is a sum of terms of the form $aN^{-\ell}\partial^{\nu_1}h_0\partial^{\nu_2}h_0 \ldots \partial^{\nu_{k-\ell}}h_0$, where $\sum_{j=1}^{k-\ell}|\nu_j| \leq 2i$ and a is smooth.

- If $\nu_j = 0$, then $\partial^{\nu_j}h_0 = h_0$.
- If $|\nu_j| = 1$, then $|\partial^{\nu_j}h_0| \leq C\sqrt{h_0}$.
- If $|\nu_j| \geq 2$, then $|\partial^{\nu_j}h_0| \leq C$.

Hence, $|aN^{-\ell}\partial^{\nu_1}h_0\partial^{\nu_2}h_0 \ldots \partial^{\nu_{k-\ell}}h_0| \leq C_k N^{-\ell} h_0^{k-\ell-\frac{1}{2}\sum_j \min(2,|\nu_j|)}$, and moreover,

$$\sum_j \min(2, |\nu_j|) \leq \sum_j |\nu_j| \leq 2i,$$

hence:

$$|aN^{-\ell}\partial^{\nu_1}h_0\partial^{\nu_2}h_0 \ldots \partial^{\nu_{k-\ell}}h_0| \leq N^{-\ell}h^{k-i-\ell}.$$

If $k - i - \ell < 0$, we apply instead the trivial estimate

$$|aN^{-\ell}\partial^{\nu_1}h_0\partial^{\nu_2}h_0 \ldots \partial^{\nu_{k-\ell}}h_0| \leq CN^{-\ell}.$$

To conclude,

$$|C_{i,k}(h, \ldots, h)| \leq C_k(h_0 + N^{-1})^{k-i} \leq C_k h^{k-i}.$$

In the last inequality we have used the fact that $h_1 \geq 2$.

This means that, for every $k \geq 0$, the symbol $h^{\star k}$ is of the form:

$$h^{\star k} = h^k + \sum_{i=1}^{k-1} N^{-i} f_{i,k} + N^{-k} g(N),$$

where g is bounded independently on N and where, for each i and k there exists C such that $|f_{i,k}| \leq C_k h^{k-i}$.

Using this, we can prove by induction on k that there exists C_k such that, for every N and for every eigenvector u of $T_N(h)$ with eigenvalue λ, one has

$$|\langle u, h^k u\rangle| \leq C_k \max(\lambda, N^{-1})^k \|u\|^2.$$

Indeed, this is clearly true for $k = 1$, because $\langle u, hu\rangle = \lambda\|u\|^2$.

Let us suppose that, for all $1 \leq i \leq k$, there exists C such that

$$|\langle u, h^{k-i}u\rangle| \leq C \max(\lambda, N^{-1})^{k-i}\|u\|^2.$$

Because u is an eigenvector for $T_N(h)$, it is an eigenvector for its powers, hence

$$T_N(h^{\star k})u = T_N(h)^k u + O(N^{-\infty}) = \lambda^k u + O(N^{-\infty}).$$

Replacing $h^{\star k}$ by its expansion, we find:

$$|\langle u, h^k u\rangle| \leq \lambda^k \|u\|^2 + \sum_{i=1}^{k-1} N^{-i}\langle u, f_{i,k} u\rangle + CN^{-k}\|u\|^2.$$

Here we used the fact that the function g is bounded.

Now recall $|f_{i,k}| \leq C_{i,k} h^{k-i}$, and the induction hypothesis:

$$|\langle u, h^{k-i} u\rangle| \leq C_i \max(\lambda, N^{-1})^{k-i}\|u\|^2$$

for every $i > 0$. Hence,

$$|\langle u, h^k u\rangle| \leq C \max(\lambda, N^{-1})^k \|u\|^2 + \sum_{i=1}^{k-1} C_{i,k} C_i N^{-i} \max(\lambda, N^{-1})^{k-i}\|u\|^2,$$

so that there exists C_k such that $|\langle u, h^k u\rangle| \leq C_k \max(\lambda, N^{-1})^k \|u\|^2$.

Now we can conclude: for every k, there exists C such that, for every $t > 0$ one has

$$\forall z \notin V_t,\ h^k \geq Ct^{2k}.$$

Finally, for every k there exists C such that, for every $N \in \mathbb{N}$, $t > 0$ and u an eigenvector of $T_N(h)$ with eigenvalue λ, there holds

$$\|u \mathbb{1}_{X\setminus V_t}\|_{L^2}^2 \leq C\left(\frac{\max(\lambda, N^{-1})}{t^2}\right)^k \|u\|_{L^2}^2.$$

□

Recalling Definition 4.1.2, let us specialize Proposition 4.3.1 to $\lambda = O(N^{-1})$ and $t = N^{-\delta}$ for $0 < \delta < 1/2$:

Corollary 4.3.3. *Let $u = (u_N)_{N\in\mathbb{N}}$ be a sequence of unit eigenvectors of $T_N(h)$, with sequence of eigenvalues $\lambda_N = O(N^{-1})$. If h vanishes exactly at order two on its zero set, then u concentrates on this set.*

Remark 4.3.4.

- An independent work by Charles and Polterovich, that appears partially in [CP15], treats the case of an eigenvalue close to a regular value of the symbol, with a result very similar to Proposition 4.3.1.

- The proof of Proposition 4.3.1 uses cancellation at order two only when dealing with V_t. Indeed, a more general result is

$$\|u 1_{X\setminus V_t}\|_{L^2}^2 \leq C\left(\frac{\max(\lambda, N^{-1})}{\max(h(x), x \in V_t)}\right)^k \|u\|_{L^2}^2,$$

  which holds for any smooth h and any eigenfunction u of $T_N(h)$ with eigenvalue λ.

The following is a variation of the previous result.

Proposition 4.3.5. *Let h be a classical symbol on M with $h_0 \geq 0$ and let $(u_N)_{N\geq 0}$ be a normalised sequence of eigenvectors of $T_N(h)$ with associated sequence of eigenvalues $O(N^{-1})$. Let $\delta > 0$.*

Then

$$\int_{\{h\geq N^{-1+\delta}\}} |u_N|^2 = O(N^{-\infty}).$$

Proof. As in the proof of Proposition 4.3.1, if h satisfies the claim, then so does $h - CN^{-1}$ for all $C \in \mathbb{R}$. In particular, without loss of generality $h_1 \geq 2$, and we can recover from the proof of Proposition 4.3.1 that, for every $k \geq 0$, there exists C_k such that

$$|\langle u_N, h^k u_N\rangle| \leq C_k N^{-k}.$$

As $\delta > 0$, one has

$$\{h \geq N^{-1+\delta}\} \subset \left\{h_0 \geq \frac{1}{2}N^{-1+\delta}\right\},$$

so that we obtain

$$\int_{\{h^k\geq N^{-k+k\delta}\}} |u_N|^2 \leq \int_{\{h_0^k\geq 2^{-k}N^{-k+k\delta}\}} |u_N|^2 \leq 2^k N^{k-k\delta}\int_M h^k|u_k|^2 \leq 2^k C_k N^{-k\delta}.$$

In particular,

$$\int_{\{h\geq N^{-1+\delta}\}} |u_N|^2 = O(N^{-\infty}).$$

□

Remark 4.3.6. Another scheme of proof for Proposition 4.3.5 consists in composing $T_N(h)$ with a test function χ_N which is 0 on $\{h \leq N^{-1+\delta/2}\}$ and 1 on $\{h \geq N^{-1+\delta}\}$. Such a function can be chosen temperate, meaning that $\|\nabla^k\chi_N\| \leq CN^{\frac{k(1-\delta)}{2}}$. See [Cha16] for details on the composition of temperate symbols.

4.4 Almost eigenfunctions for the ground state

This section is devoted to the proof of Theorem 4.1.

Let $P_0 \in M$, one can find normal coordinates from a neighbourhood of P_0 to a neighbourhood of 0 in $\mathbb{C}^n$. If at P_0 a non-negative function h vanishes with positive Hessian, the 2-jet of h at P_0 maps to a positive quadratic form q on $\mathbb{C}^n$, up to a $U(n)$ change of variables. Hence, the map associating to P_0 the first eigenvalue μ of the model quadratic operator $T_N(q)$ is well-defined. From now on, we will also call μ this map.

The method of proof for Theorem 4.1 is then as follows: for each vanishing point P_0, we construct (Proposition 4.4.2) a sequence of functions which concentrates on P_0, consisting of almost eigenfunctions of $T_N(h)$, and for which the associated sequence of eigenvalues is equivalent to $N^{-1}\mu(P_0)$ as $N \to +\infty$. We then show a positivity estimate (Proposition 4.4.4) for eigenfunctions concentrating on a single well. The uniqueness and spectral gap properties (Proposition 4.4.6) follow from a similar argument. At every step, we compare $T_N(h)$ with the operator on $\mathcal{B}_N$ whose symbol is the Hessian of h at the point of interest.

4.4.1 Construction of almost eigenfunctions

We let h denote a smooth function satisfying the wells condition of Definition 4.1.1. At every cancellation point of h, we will find a candidate for the ground state of $T_N(h)$. Instead of finding exact eigenfunctions, we search for approximate eigenfunctions. This is motivated by the following lemma:

Lemma 4.4.1. *Let T be a self-adjoint operator on a Hilbert space, let $\lambda \in \mathbb{R}$, and $u \in D(T)$ with norm 1.*

Then $\operatorname{dist}(\lambda, \operatorname{Sp}(T)) \leq \|T(u) - \lambda u\|$.

Let $P_0 \in M$ be a point where h vanishes. Let ρ be a local map of normal coordinates in a neighbourhood of $\pi^{-1}(P_0)$. Let Ω_N be the set of $z \in \mathbb{C}^n$ such that $(z/\sqrt{N}, 0)$ belongs to the domain of ρ. Recall from equation (4) that, for every $N \in \mathbb{N}$ and every $z, w \in \Omega_N$, there holds:

$$N^{-n} S_N^{P_0}\left(\frac{z}{\sqrt{N}}, \frac{w}{\sqrt{N}}\right) = \Pi_1(z,w)\left(1 + \sum_{k=1}^{K} N^{-k/2} b_k(z,w))\right) + R_K(z,w,N) + O(N^{-\infty}). \quad (11)$$

Here the b_j's are polynomials of the same parity as j, and there exist $C > 0, m > 0$ such that, for every (z, w, N) as above:

$$|R_K(z,w,N)| \leq C N^{-(K+1)/2} e^{-C'|z-w|}(1 + |z|^m + |w|^m).$$

The main proposition is

Proposition 4.4.2. *There exists a sequence $(u_j)_{j\geq 0}$ of elements of $\mathcal{S}(\mathbb{C}^n)$, with $\langle u_0, u_k\rangle = \delta_k^0$, and a sequence $(\lambda_j)_{j\geq 0}$ of real numbers, with $\lambda_0 = \mu(P_0)$ and $\lambda_j = 0$ for j odd, such that, for each K and N, if $u^K(N) \in L^2(X)$ and $\lambda^K(N) \in \mathbb{R}$ are defined as:*

$$u^K(N)(\rho(z,\theta)) := e^{iN\theta} N^n \sum_{j=0}^{K} N^{-j/2} u_j(\sqrt{N} z),$$

$$u^K(N) \text{ is supported in the image of } \rho,$$

$$\lambda^K(N) = N^{-1} \sum_{j=0}^{K} N^{-j/2} \lambda_j,$$

there holds, as $N \to +\infty$,

$$\|S_N h S_N u^K(N) - \lambda^K(N) u^K(N)\|_{L^2(X)} = O(N^{-(K+3)/2}).$$

Remark 4.4.3. The functions $u^K(N)$ do not lie inside $H_N(X)$, because they are identically zero on an open set. Nevertheless, the operator $S_N h S_N$ on $L^2(X)$ decomposes orthogonally into $T_N(h)$ on $H_N(X)$, and 0 on its orthogonal. Hence, a nonzero eigenvalue of $S_N h S_N$ must correspond to an eigenvalue of $T_N(h)$ with same eigenspace. The same holds for almost eigenvalues.

Introducing λ^K as a polynomial in $N^{-1/2}$ whose odd terms vanish may seem surprising. However, in the proof, we construct λ^K as a polynomial in $N^{-1/2}$, as we do for u^K. The fact that it is a polynomial in N^{-1} is due to parity properties.

Proof. Let us solve the successive orders of

$$(S_N h S_N - \lambda^K(N))u^K(N) \approx 0.$$

We write the Taylor expansion of h around P_0 at order K as

$$h(x) = q(x) + \sum_{j=3}^{K} r_j(x) + E_K(x).$$

Because of equation (11), the kernel of $S_N h S_N$, read in the map ρ, is:

$$\begin{aligned} N^{-n} e^{i(\phi-\theta)} S_N h S_N \Big(\rho\Big(N^{-1/2}z, N^{-1}\theta\Big), \rho\Big(N^{-1/2}w, N^{-1}\phi\Big)\Big) \\ = N^{-1} \int \left(q(y) + \sum_{k=1}^{K-2} N^{-k/2} r_{k+2}(y) + N E_K(N^{-1/2}y) \right) \\ \times \left[\Pi_1(z,y) \left(1 + \sum_{j=1}^{K} N^{-j/2} b_j(z,y) \right) + R_K(z,y,N) \right] \\ \times \left[\Pi_1(y,w) \left(1 + \sum_{l=1}^{K} N^{-l/2} b_l(y,w) \right) + R_K(y,w,N) \right] \mathrm{d}y \\ + O(N^{-\infty}). \end{aligned} \tag{12}$$

Let us precisely write down the $K = 0$ and $K = 1$ case.

The dominant order (that is, N^{-1}) of the right-hand side is simply:

$$(z,w) \mapsto N^{-1} \int_{\mathbb{C}^n} \Pi_1(z,y) q(y) \Pi_1(y,w) \mathrm{d}y.$$

It is N^{-1} times the kernel of the Toeplitz operator $Q = T_1(q)$ on B_1 associated to the quadratic symbol q, which we studied in Subsections 4.2.2 and 4.2.3. Its resolvant is compact, the first eigenvalue $\mu(P_0)$ is simple, and if u_0 is an associated eigenvector, the operator $Q - \mu(P_0)$ has a continuous inverse on $u_0^\perp$ which sends $\mathcal{D}(\mathbb{C}^n)$ into itself by Proposition 4.2.12. Moreover, u_0 is an even function.

This determines u_0 and $\lambda_0 = \mu(P_0)$. Here $u_0 \in \mathcal{D}(\mathbb{C}^n)$, so we can truncate the function $(z,\theta) \mapsto e^{iN\theta} N^n u_0(N^{1/2}z)$ to a function supported on the domain of ρ, with only $O(N^{-\infty})$ error. The push-forward by ρ of this truncation, extended by zero outside the image of ρ, is denoted by $u^0(N)$.

Now $u_0 \in \mathcal{D}$ so u^0 concentrates on P_0. The error is thus:

$$\begin{aligned} \|S_N h S_N u^0(N) - N^{-1}\lambda_0 u^0(N)\|^2_{L^2(X)} \\ \leq C N^{-2} \int_{\Omega_N^3} A(z,y,w,N)^2 |u_0(w)|^2 \mathrm{d}y \mathrm{d}w \mathrm{d}z + O(N^{-\infty}), \end{aligned}$$

where

$$\begin{aligned} A(z,y,w,N) = N|E_2(N^{-1/2}y)\Pi_1(z,y)\Pi_1(y,w)| \\ + h(y)\Big(|R_0(z,y,N)|\Pi_1(y,w) + |R_0(y,w,N)|\Pi_1(z,y) \\ + |R_0(z,y,N)R_0(y,w,N)| \Big). \end{aligned}$$

Here, E_2 is a Taylor remainder of order 3 on a compact set, so

$$|NE_2(N^{-1/2}y)| \leq C|y|^3 N^{-1/2}.$$

Moreover, recall that, on Ω_N^2, one has

$$|R_0(z,y,N)| \leq CN^{-1/2}e^{-C'|z-y|}(1+|z|^m+|y|^m).$$

Hence, on Ω_N^3, there holds:

$$|A(z,y,w,N)| \leq CN^{-1/2}e^{-C'|z-y|-C'|y-w|}(1+|z|^m+|y|^m+|w|^m).$$

Because $u_0 \in \mathcal{D}$, one deduces:

$$\begin{aligned}
&N^3 \int_X |S_N h S_N u^0 - N^{-1}\lambda_0 u^0|^2 \\
&\leq C \int_{\Omega_N^3} e^{-2C'|z-y|-2C'|y-w|}(1+|z|^{2m}+|y|^{2m}+|w|^{2m})|u_0(w)|^2 \mathrm{d}y\mathrm{d}z\mathrm{d}w \\
&\qquad\qquad\qquad\qquad\qquad\qquad\qquad\qquad\qquad\qquad + O(N^{-\infty}) \\
&\leq C\left(\int_{\mathbb{C}^n} |v|^{2m}e^{-C'|v|}\mathrm{d}v\right)^2 \int_{\mathbb{C}^n} |w|^{2m}|u_0(w)|^2\mathrm{d}w + O(N^{-\infty}) \\
&\leq C.
\end{aligned}$$

This method (estimating an error kernel using polynomial growth and off-diagonal exponential decay) will be used repeatedly again.

From there we deduce that u_0 is an approximate eigenvector:

$$\|S_N h S_N u_0(N) - N^{-1}\lambda_0 u_0(N)\|_{L^2(X)} = O(N^{-3/2}).$$

This proves the proposition for the case $K = 0$.

The construction of u_1 and λ_1 is different, moreover there are supplementary error terms. The term of order $N^{-3/2}$ in the right-hand side of equation (12) is:

$$(z,w) \mapsto N^{-3/2}\int_{\mathbb{C}^n} \Pi_1(z,y)[r_3(y)+q(y)(b_1(z,y)+b_1(y,w))]\Pi_1(y,w)\mathrm{d}y.$$

Let J_1 denote the operator with kernel as above. We are trying to find u_1 and λ_1 such that

$$(Q-\lambda_0)u_1 + J_1 u_0 = \lambda_1 u_0, \tag{13}$$

with the supplementary condition that $\langle u_1, u_0\rangle = 0$: indeed if (u_1,λ_1) is a solution of equation (13), then so is $(u_1 + cu_0, \lambda_1)$ for any $c \in \mathbb{C}$. The orthogonality condition makes the solution unique as we will see.

The functions r_3, q and b_1 are polynomials, so $J_1(\mathcal{D}) \subset \mathcal{S}(\mathbb{C}^n)$. This ensures that the problem is well-posed. Note that J_1 does not map $\mathcal{D}$ into holomorphic functions; this is because the normal map ρ does not preserve the holomorphic structure.

Now r_3 and b_1 are odd functions, so $J_1 u_0$ is odd. In particular, $\langle u_0, J_1 u_0\rangle = 0$, and because Q is self-adjoint, $\langle u_0, (Q-\lambda_0)u_1\rangle = 0$. From this we deduce that $\lambda_1\|u_0\|^2 = 0$, hence $\lambda_1 = 0$.

To find u_1, we use again the fact that $J_1 u_0$ is orthogonal to u_0. Since λ_0 is a simple eigenvalue, $Q-\lambda_0$ is invertible from $u_0^\perp$ to itself, and maps $\mathcal{S}\cap u_0^\perp$ to itself

by Proposition 4.2.12. Hence, there exists a unique $u_1 \in \mathcal{S}$ orthogonal to u_0, such that $(u_1, 0)$ solves (13). Moreover, u_1 is odd.

Now we investigate the error terms. With u^1 and λ^1 as in the statement, let

$$f^1(N) = (S_N h S_N - \lambda^1(N))u^1(N).$$

As u_0 and u_1 belong to $\mathcal{S}$, the function u^1 concentrates on P_0, and so does f^1. Hence, it is sufficient to control f^1 near P_0. After a change of variables, one has:

$$\begin{aligned}
&N^{-n}e^{-i\theta}f^1(N)(\rho(N^{-1/2}z, N^{-1}\theta)) = N^{-2}J_1u_1(z)\\
&+\int \Pi_1(z,y)\Pi_1(y,w)E_3(\frac{y}{\sqrt{N}})(1+\frac{b_1(z,y)}{\sqrt{N}})(1+\frac{b_1(y,w)}{\sqrt{N}})(u_0(w)+\frac{u_1(w)}{\sqrt{N}})\mathrm{d}y\mathrm{d}w\\
&+N^{-1}\int R_1(z,y,N)\Pi_1(y,w)(1+\frac{b_1(y,w)}{\sqrt{N}})(q(y)+\frac{r_3(y)}{\sqrt{N}})(u_0(w)+\frac{u_1(w)}{\sqrt{N}})\mathrm{d}y\mathrm{d}w\\
&+N^{-1}\int \Pi_1(z,y)(1+\frac{b_1(z,y)}{\sqrt{N}})R_1(y,w,N)(q(y)+\frac{r_3(y)}{\sqrt{N}})(u_0(w)+\frac{u_1(w)}{\sqrt{N}})\mathrm{d}y\mathrm{d}w\\
&\quad+N^{-1}\int R_1(z,y,N)R_1(y,w,N)(q(y)+\frac{r_3(y)}{\sqrt{N}})(u_0(w)+\frac{u_1(w)}{\sqrt{N}})\mathrm{d}y\mathrm{d}w\\
&\qquad\qquad+O(N^{-\infty}).
\end{aligned}$$

As $u_1 \in \mathcal{S}$, the first line of the right-hand term is well-defined, and

$$\|N^{-2}J_1u_1\| = O(N^{-2}).$$

There holds a uniform Taylor estimate on the domain of ρ:

$$E_3(y) \leq C|y|^4,$$

so $E_3(N^{-1/2}y)$ is bounded by N^{-2} times a function with polynomial growth independent of N. In particular, there exist $C, C', m > 0$ such that, on Ω_N^3:

$$\begin{aligned}
&|E_3(N^{-1/2}y)\Pi_1(z,y)\Pi_1(y,w)|\\
&\qquad\leq CN^{-2}e^{-C'|z-y|-C'|y-w|}(1+|z|^m+|y|^m+|w|^m).
\end{aligned}$$

Of course the same type of estimate (with different C and m) applies if we multiply the left-hand side by $b_1(z,y)$, $b_1(y,w)$, or both. Hence, following the last part of the $K=0$ case, we can estimate the second line of the expansion of f^1 as $O_{L^2(X)}(N^{-2})$.

The three following lines are treated the same way: because u_0 and u_1 belong to $\mathcal{S}$, it is sufficient to prove estimates for the error kernels, of the form

$$|A(z,y,w,N)| \leq N^{-2}Ce^{-C'|z-y|-C'|y-w|}(1+|z|^m+|y|^m+|w|^m),$$

which are easily checked.

We construct by induction on K the following terms of the expansion.

For $j \geq 1$, we let $J_j : L^2(\mathbb{C}^n) \mapsto L^2(\mathbb{C}^n)$ the unbounded and symmetric operator with kernel

$$J_j(x,z) = \int_{\mathbb{C}^n} \Pi_1(x,y)\Pi_1(y,z)\left(\sum_{\substack{k+l+m=j\\ k,m,l\geq 0}} b_k(x,y)r_{2+l}(y)b_m(y,z)\right)\mathrm{d}y.$$

Here we use the convention $b_0 = 1$, and $r_2 = q$. The dense subspace $\mathcal{S}(\mathbb{C}^n)$ is included in the domain of J_j, moreover $J_j(\mathcal{S}) \subset \mathcal{S}$ because all the b_j's and r_l's are polynomials. Moreover, J_j has the same parity as j.

Let $K \in \mathbb{N}$, and suppose we found functions $(u_k)_{k \leq K} \in \mathcal{S}$, orthogonal to u_0, and of the same parity as k, and real numbers λ_k that vanish when k is odd, and such that, for each $k \leq K$, there holds:

$$(Q - \lambda_0)u_k + \sum_{j=1}^{k} J_j u_{k-j} = \lambda_k u_0 + \sum_{j=1}^{k-1} \lambda_j u_{k-j}. \tag{14}$$

Let us find u_{K+1}, orthogonal to u_0, and λ_{K+1} so that equation (14) also holds for $k = K + 1$.

Take the scalar product with u_0. As Q is symmetric, the left-hand side vanishes, and we get a linear equation in λ_{K+1}, whose dominant coefficient is $\|u_0\|^2 = 1$. Hence, λ_{K+1} is uniquely determined. Moreover, if $K+1$ is odd, then $J_j u_{K+1-j}$ and $\lambda_j u_{K+1-j}$ are odd functions for every j, so their scalar products with u_0 are zero, so that $\lambda_{K+1} = 0$.

We now are able to find u_{K+1} because we can invert $Q - \lambda_0$ on the orthogonal set of u_0. Finally, u_{K+1} is of the same parity as $K + 1$.

It remains to show that this sequence of functions u corresponds to an approximate eigenvector of $S_N h S_N$.

Let $K \geq 0$, fixed in what follows. For each $N \in \mathbb{N}$, we can build a function $u^K(N)$ on X, supported in the image of ρ and such that, for x in the image of ρ, one has $u^K(N)(\rho(z, \theta)) = e^{iN\theta} N^n \sum_{k=0}^{K} N^{-k/2} u_k(\sqrt{N} z)$. Note that $u^K(N)$ concentrates on P_0.

Let

$$\lambda^K(N) = N^{-1} \sum_{k=0}^{K} N^{-k/2} \lambda_k.$$

We evaluate $(S_N h S_N - \lambda^K(N))u^K(N) =: f^K(N)$. Consider an open set V_1, containing P_0, and compactly included in the image of ρ. One has

$$\|f^K(N)\|_{L^\infty({}^c V_1)} = O(N^{-\infty})$$

because $u^K(N)$ concentrates on P_0.

To compute $f^K(N)$ in V_1, we use the equation (11) at order K. A change of variables leads to:

$$\begin{aligned}
&N^{-n} e^{-iN\theta} f^K(N)\Big(\rho(N^{-1/2} z, \theta)\Big) \\
&= N^{-1} \sum_{k=0}^{K} N^{-\frac{k}{2}} \left[(Q - \lambda_0)u_k(z) - \sum_{j=1}^{k} J_j u_{k-j}(z) - \lambda_k u_0(z) - \sum_{j=1}^{k-1} \lambda_j u_{k-j}(z) \right] \\
&\qquad + N^{-1} \sum_{k=K+1}^{2K} N^{-\frac{k}{2}} \left[- \sum_{j=k-K}^{K} (J_j - \lambda_j) u_{k-j}(z) \right] \\
&\quad + \sum_{k,j,l=0}^{K} N^{-\frac{k+j+l}{2}} A_{j,l,N} u_k(z) + \sum_{k,j=0}^{K} N^{-\frac{k+j}{2}} A'_{j,N} u_k(z) + \sum_{k=0}^{K} N^{-\frac{k}{2}} A''_N u_k(z).
\end{aligned}$$

By construction, the first line of the right-hand term vanishes. The second line is $O(N^{-(K+3)/2})$. There are three error terms in the last line. $A_{j,l,N}$ is the operator with kernel:

$$A_{j,l,N}(z,w) = \int_{\Omega_N} \Pi_1(z,y)\Pi_1(y,w)b_j(z,y)b_l(y,w)E_K(N^{-1/2}y)\mathrm{d}y.$$

The function E_K is a Taylor remainder at order $K+3$, so there exist constants $C>0, C'>0, m>0$ such that, on Ω_N^3:

$$\begin{aligned}&|\Pi_1(z,y)\Pi_1(y,w)b_j(z,y)b_l(y,w)E_K(N^{-1/2}y)|\\ &\qquad\qquad \leq CN^{-(K+3)/2}e^{-C'|z-y|+C'|y-w|}(1+|z|^m+|y|^m+|w|^m).\end{aligned}$$

Hence, for each function $u \in \mathcal{S}$, one has

$$\|A_{j,l,N}(u)\|_{L^2} = O(N^{-(K+3)/2}).$$

In particular it is true of the functions u_k.

$A'_{j,N}$ is the operator with kernel:

$$\begin{aligned}A'_{j,N}(z,w) = &\int_{\Omega_N} \Pi_1(z,y)b_j(z,y)h(N^{-1/2}y)R_K(y,w,N)\mathrm{d}y\\ &+ \int \Pi_1(y,w)b_j(y,w)R_K(z,y,N)h(N^{-1/2}y)\mathrm{d}y.\end{aligned}$$

One has $h(N^{-1/2}y) \leq CN^{-1}|y|^2$, so there are constants $C>0, C'>0, m>0$ such that, on Ω_N^3:

$$\begin{aligned}&|\Pi_1(z,y)b_j(z,y)h(N^{-1/2}y)R_K(y,w,N)|\\ &\qquad\qquad \leq CN^{-(K+3)/2}e^{-C'|z-y|-C'|y-w|}(1+|z|^m+|y|^m+|w|^m).\end{aligned}$$

As usual we get, for every k, that

$$\|A'_{j,N}(u_k)\|_{L^2} = O(N^{-(K+3)/2}).$$

A''_N is the operator with kernel

$$A''_N(x,z) = \int_{\Omega_N^3} R_K(x,y,N)h(N^{-1/2}y)R_K(y,z,N)\mathrm{d}y.$$

Again there exist constants $C>0, C'>0, m>0$ such that, on Ω_N^3:

$$\begin{aligned}&|R_K(z,y,N)h(N^{-1/2}y)R_K(y,w,N)|\\ &\qquad\qquad \leq CN^{-K-3}e^{-C'|z-y|-C'|y-w|}(1+|z|^m+|y|^m+|w|^m).\end{aligned}$$

To conclude, the L^2-norm of all the error terms is $O(N^{-(K+3)/2})$. □

From this proposition we conclude that, at every well P, *there exists* an eigenvalue of $T_N(h)$ which has an asymptotic expansion in inverse powers of N, the dominant term being $N^{-1}\mu(P)$. In particular, the first eigenvalue of $T_N(h)$ is $O(N^{-1})$.

4.4.2 A positivity estimate

The following proposition implies that the first eigenfunctions only concentrate on the wells that are minimal:

Proposition 4.4.4. *Let $(v_N)_{N\in\mathbb{N}}$ a sequence of normalized functions in $L^2(X)$, such that $v_N \in H_N(X)$ for every N. Suppose v concentrates at a point P_0, on which h vanishes. Then for each $\epsilon > 0$ there exists N_0 and C such that, if $N > N_0$,*

$$\langle v_N, hv_N\rangle \geq N^{-1}\mu(P_0) - CN^{-3/2+\epsilon}.$$

Proof. Let $\delta < \frac{1}{2}$ be close to $\frac{1}{2}$. Let ρ denote a normal map around P_0. Then the sequence $(w_N)_{N>0} = (\rho^* v_N)_{N>0}$ is such that $\|w_N\|_{L^2({}^cB(0,N^{-\delta}))} = O(N^{-\infty})$. Then one has as well:

$$\begin{aligned}\|\Pi_N w_N\|_{L^2({}^cB(0,2N^{-\delta}))} &= O(N^{-\infty})\\ \|S_N^{P_0} w_N\|_{L^2({}^cB(0,2N^{-\delta}))} &= O(N^{-\infty}).\end{aligned}$$

Using Proposition 3.3.1, for δ close enough to $\frac{1}{2}$, if $\rho_*\Pi_N$ is a push-forward of Π_N by ρ, one has $\|(S_N - \rho_*\Pi_N)v_N\| \leq CN^{-\frac{1}{2}+\epsilon}$. Hence,

$$\|(S_N^{P_0} - \Pi_N)w_N\| \leq CN^{-\frac{1}{2}+\epsilon}.$$

If Q is the Hessian of h at P_0 read in the chosen coordinates, the spectrum of the model quadratic operator $\Pi_N Q \Pi_N$ is known: one has

$$\langle w_N, \Pi_N Q \Pi_N w_N\rangle \geq N^{-1}\mu(P_0)\|\Pi_N w_N\|^2.$$

Moreover, on $B(0, 2N^{-\delta})$ the following holds: $CN^{-2\delta} \geq h \geq Q - CN^{-3\delta}$.

Now, if δ is close enough to $\frac{1}{2}$, one has:

$$\begin{aligned}&\langle w_N, S_N^{P_0} h S_N^{P_0} w_N\rangle\\ &\geq \langle w_N, S_N^{P_0} Q S_N^{P_0} w_N\rangle - CN^{-3\delta}\\ &= \langle w_N, S_N^{P_0} Q \Pi_N w_N\rangle + \langle w_N, S_N^{P_0} Q (S_N^{P_0} - \Pi_N) w_N\rangle - CN^{-3\delta}\\ &\geq \langle w_N, S_N^{P_0} Q \Pi_N w_N\rangle - CN^{-2\delta-\min(\delta,\frac{1}{2}-\epsilon)}\\ &= \langle w_N, \Pi_N Q \Pi_N w_N\rangle + \langle w_N, (S_N^{P_0} - \Pi_N) Q \Pi_N w_N\rangle - CN^{-2\delta-\min(\delta,\frac{1}{2}-\epsilon)}\\ &\geq \langle w_N, \Pi_N Q \Pi_N w_N\rangle - CN^{-2\delta-\min(\delta,\frac{1}{2}-\epsilon)}\\ &\geq N^{-1}\mu(P_0) - CN^{-2\delta-\min(\delta,\frac{1}{2}-\epsilon)}.\end{aligned}$$

Choosing δ such that $\delta \geq \frac{1}{2} - \epsilon$ concludes the proof. □

Remark 4.4.5. In the proof, it appears that the condition of concentration on P_0 can be slightly relaxed. We only used the fact that, for some fixed δ determined by the geometry of M and by ϵ, one has

$$\|v_N \mathbb{1}_{\pi(x)\notin B(P_0,N^{-\delta})}\|_{L^2} = O(N^{-\infty}).$$

Thus, this proposition could be used in a more general context.

4.4.3 Uniqueness and spectral gap

Proposition 4.4.6. *Suppose h satisfies the wells condition of Definition 4.1.1, and that there is only one well with minimal μ. Then the approximate eigenvalues of proposition 4.4.2 associated to this well correspond to the first eigenvalue λ_N of $T_N(h)$, namely, for every $K \in \mathbb{N}$, there holds:*

$$|\lambda^K(N) - \lambda_N| = O(N^{-(K+3)/2}).$$

This eigenvalue is simple; moreover there exists $C > 0$ such that, for N large enough:

$$\mathrm{dist}(\lambda_N, \mathrm{Sp}(T_N(h)) \setminus \{\lambda_N\}) \geq CN^{-1}.$$

Proof. By the min-max principle, the proposition is equivalent to the claim that there exists K such that the following is true: let $u_K(N)$ denote the approximate eigenvector of order K associated to the well with minimal μ. Let F_N be the orthogonal complement of $u_K(N)$ in $H_N(X)$, and p_N be the orthogonal projection from $H_N(X)$ to F_N. Then the operator $T_N^\sharp(h) : F_N \to F_N$, defined as $T_N^\sharp(h) = p_N T_N(h)$, is bounded from below by $\lambda_N + CN^{-1}$.

Let v_N be a sequence of normalized eigenvectors of $T_N^\sharp(h)$, and μ_N the sequence of associated eigenvalues. One has $T_N(h)v_N = \mu_N v_N + C_N u_K(N)$. Because $u_K(N)$ is a sequence of normalized functions and S_N is bounded, the sequence C_N is bounded.

Assume $\mu_N = O(N^{-1})$. In this slightly different setting, we can adapt the proof of Proposition 4.3.1 using the fact that $u_K(N)$ is itself an almost eigenfunction of $T_N(h)$. There holds:

$$T_N(h^{\star k})v_N = \mu_N^k v_N + C_N \sum_{j=1}^{k} \mu_N^{j-1}\lambda_N^{k-j} u_K(N) + O(N^{-(K+3)/2}).$$

In particular, for $0 \leq k \leq \frac{K+3}{2}$, there holds

$$\langle v_N, T_N(h^{\star k})v_N\rangle = \mu_N^k + O(N^{-\frac{K+3}{2}}) = O(N^{-k}).$$

From there, one can proceed as in 4.3.1 but the induction process stops at $k = \frac{K+3}{2}$. One concludes that, for every $\epsilon > 0$, the L^2 norm of v_N is $O(N^{-\frac{K+3-\epsilon}{4}})$ outside the union of balls centred at the vanishing points of h, and of radius $N^{-\frac{1}{2}+\frac{\epsilon}{K+3}}$.

In particular, if $P_0, P_1, \ldots, P_d$ denote the vanishing points of h, and P_0 is the only one with minimal μ, one can decompose

$$v_N = v_{0,N} + v_{1,N} + \ldots + v_{d,N} + O(N^{-(K+3-\epsilon)/4}),$$

where each sequence $v_{i,N}$ concentrates on P_i. Proposition 4.4.4 gives estimates for $v_{i,N}$ if $i \neq 0$. Indeed $\mu(P_i) > \mu(P_0)$ by construction, and

$$\lambda_N \leq N^{-1}\mu(P_0) + O(N^{-3/2}),$$

so one can find $C > 0$ small enough such that $N\lambda_N + C < \mu(P_i)$ for all $i \neq 0$ and for N large enough. Then

$$\langle v_{i,N}, S_N h S_N v_{i,N}\rangle \geq (\lambda_N + CN^{-1})\|v_{i,N}\|_2^2.$$

Recall that $u_K(N)$ has an asymptotic expansion whose first term u_0 is the pull-backed ground state of the operator on the Bargmann space with quadratic symbol Q_0. In particular, (recall $u_K(N)$ concentrates on P_0),

$$\langle u_K(N), T_N(Q_0), u_K(N)\rangle \leq N^{-1}(\min(\mathrm{Sp}(T_1(Q_0))) + CN^{-\frac{1}{2}+\epsilon}).$$

This operator $T_1(Q_0)$ has a (fixed) nonzero specral gap. Moreover,

$$\langle v_{0,N}, u_K(N)\rangle = O(N^{-(K+3-\epsilon)/4})$$

because v_N is orthogonal to $u_K(N)$ and $u_K(N)$ concentrates only at P_0. Then for C strictly smaller than the spectral gap of $T_1(Q_0)$, one has by the min-max principle, for N large

$$\langle v_{0,N}, T_N(Q_0)v_{0,N}\rangle \geq (\lambda_N + CN^{-1})\max(\|v_{0,N}\|^2, N^{-(K-1-\epsilon)/4}).$$

The functions $v_{i,N}$ have disjoint supports, so that $\langle v_{i,N}, S_N h S_N v_{j,N}\rangle = O(N^{-\infty})$ whenever $i \neq j$, and $\|v_N\|_2^2 = \sum_j \|v_{j,N}\|_2^2 + O(N^{-(K+3-\epsilon)/4})$. Thus the two inequalities allow us to conclude when $K \geq 2$. □

4.4.4 End of the proof

It remains to show that, in the case where only one well P_0 has minimal μ, then the ground state is $O(N^{-\infty})$ in a fixed neighbourhood of the other wells. Let $K \in \mathbb{N}$. We have constructed in Subsection 4.4.1 a sequence $(u_K(N))_{N\in\mathbb{N}}$ which vanishes outside a fixed neighbourhood of P_0, and which is a sequence of approximate unit eigenvectors of $T_N(h)$, with approximate eigenvalue $\lambda_K(N)$. One has

$$\lambda_K(N) = N^{-1}\mu(P_0) + O(N^{-3/2}),$$

and

$$\mathrm{dist}(\lambda_K(N), \mathrm{Sp}(T_N(h)) = O(N^{-(K+3)/2}).$$

Moreover, we proved in Subsection 4.4.3 that there can be only one eigenvalue of $T_N(h)$ in $[0, N^{-1}(\mu(P_0)+C)]$ for some C, and that this eigenvalue is simple. Hence, denoting $\lambda_\infty(N)$ this sequence of eigenvalues, one has

$$\lambda_\infty(N) = \min \mathrm{Sp}(T_N(h)),$$

and

$$|\lambda_\infty(N) - \lambda_K(N)| = O(N^{-(K+3)/2}).$$

Let $U_\infty(N)$ denote a sequence of unit eigenvectors associated to $\lambda_\infty(N)$, and decompose $u_K(N) = c(N)U_\infty(N) + w_K(N)$, where $w_K(N) \perp U_\infty(N)$. Then

$$(T_N(h) - \lambda_\infty(N))w_K(N) = O(N^{-(K+3)/2}).$$

The operator $T_N(h) - \lambda_\infty(N)$ is invertible on $U_\infty(N)^\perp$ and its inverse has a norm bounded by N, so $w_K(N) = O(N^{-(K+1)/2})$. Since both $u_K(N)$ and $U_\infty(N)$ are normalized, one has $c(N) \to 1$.

Finally, if V is a neighbourhood of another well, then $u_K(N)$ is zero on V, so that

$$\|U_\infty(N)\|_{L^2(V)} = \|w_K(N)\|_{L^2(V)} = O(N^{-(K+1)/2}).$$

This concludes the proof.

4.5 Study of excited states

This section is devoted to the proof of Theorem 4.2. We will make frequent references to Section 4.4 as the methods of proof share many similarities.

4.5.1 Construction of approximate eigenvectors

In the proof of Proposition 4.4.2, the first guess for an approximate eigenvector of $T_N(h)$ was the first eigenvector of the model quadratic operator at one of the wells. If, instead of the first eigenvector, we start from any eigenvector of the model quadratic operator, we can proceed the same way; however the recursion stops after one step, in general.

Proposition 4.5.1. *Let $P \in M$ on which h cancels, and Q be a model quadratic operator in some normal map ρ around P. Let λ be an eigenvalue of Q and E_λ the corresponding eigenspace. Then one can find a suitable orthonormal basis $(v_1, \dots, v_L)$ of E_λ, functions $(w_1, \dots, w_L)$ in $\mathcal{S}(\mathbb{C}^n)$ and real numbers $(b_1, \dots, b_L)$ such that, for any integer $1 \le l \le L$, the function*

$$\tilde{v}_l(N) : \rho(z, \theta) \mapsto N^n e^{iN\theta}(v_l(N^{1/2}z) + N^{-1/2}w_l(N^{1/2}z))$$

is such that

$$S_N h S_N \tilde{v}_l(N) = N^{-1}\lambda + N^{-3/2}b_l + O(N^{-2}),$$

Moreover, if $\dim E_\lambda = 1$, then if u_0 is an eigenvector of Q, one can find a sequence of Schwartz functions $(u_k)_{k\ge1}$, orthogonal to u_0, and a sequence of real numbers $(\lambda_k)_{k\ge1}$, such that, for every $K > 0$, the function

$$u_K(N) : \rho(z, \theta) \mapsto N^n e^{iN\theta} \sum_{k=0}^{K} N^{-k/2} u_k(N^{1/2}z)$$

is such that

$$S_N h S_N u_K(N) = N^{-1}\lambda + N^{-1} \sum_{k=1}^{K/2} N^{-k}\lambda_k = O(N^{-(K+3)/2}).$$

Proof. Recall from Proposition 4.4.2 that one can find an approximate eigenvector at any order, starting from the ground state u_0 of Q.

Let now u_0 denote an arbitrary eigenfunction of Q, which still belongs to $\mathcal{D}$. Since $T_N(Q)$ preserves the two orthogonal subspaces of even and odd functions, without loss of generality, u_0 is either even or odd. Let λ be the associated eigenvalue. When λ is simple, the operator $Q - \lambda$ has a continuous inverse on $u_0^\perp$, so one can solve equation (14) at any order. Observe that u_0 is either even or odd, so that only negative integer powers of N remain in the expansion of the eigenvalue.

If $Q - \lambda$ is not invertible on $u_0^\perp$, the equation (14) can still be solved for $K = 1$ if u_0 is one of the vectors of a convenient basis of E_λ; but the construction fails at higher orders. Consider an orthonormal basis $(v_1, \dots, v_L)$ of the eigenspace E_λ. Suppose $u_0 = v_l$. The equation (14) reads:

$$(Q - \lambda)u_1 + J_1 u_0 = \lambda_1 u_0.$$

Taking the scalar product with u_0 yields $\lambda_1(l) = \langle v_l, J_1 v_l \rangle$. But we also need to check that $0 = \langle v_l, J_1 v_j \rangle$ for $l \neq j$. Since J_1 is diagonal and E_λ is finite-dimensional, one can choose an orthonormal basis $(v_1, \dots, v_L)$ in which the corestriction of J_1 on E_λ (that is, the operator ΠJ_1 from E_λ to itself, where Π is the orthogonal projection on E_λ) is diagonal. One can then find $u_1(l)$ in $E_\lambda^\perp$. The proof of the error estimate is the same. To conclude we let $b_l = \lambda_1(l)$ and $w_l = u_1(l)$.

Once the $K = 1$ step is done, the basis $(v_1, \dots, v_L)$ is fixed. Let us try to solve equation (14) with $u_0 = v_1$, for $K = 2$. We write

$$(Q - \lambda)u_2 + J_2 u_0 + J_1 u_1 = \lambda_2 u_0 + \lambda_1 u_1.$$

Taking the scalar product with u_0 yields λ_2 as previously:

$$\lambda_2 = \langle u_0, J_2 u_0 \rangle + \langle u_0, J_1 u_1 \rangle.$$

Now recall u_1 is orthogonal to E_λ. If v denotes an element of E_λ orthogonal to u_0, then one must check

$$\langle v, J_2 u_0 \rangle + \langle v, J_1 u_1 \rangle = 0.$$

This equation does not hold in general, hence the obstruction. □

4.5.2 Uniqueness

Let $C' > 0$, and $N \in \mathbb{N}$. Let $(v_j)_{1 \leq j \leq J}$ be a maximal family of elements of B_N satisfying the following conditions:

- For each $1 \leq j \leq J$, there exists $0 \leq i(j) \leq d$ such that v_i is a normalised eigenvector of the model quadratic operator $T_N(Q_j)$ for h at P_i, with eigenvalue strictly smaller than C'.
- If $i(j) = i(j')$ then $v_j \perp v_{j'}$.
- For all $1 \leq j \leq J$, the function v_j is either odd or even.
- For every $\lambda \in \mathbb{R}$ and $0 \leq i \leq d$, the family $\{v_j, i(j) = i, T_N(Q_j)v_j = \lambda v_j\}$ is suitable in the sense of Proposition 4.5.1.

The existence of such a family is guaranteed by Proposition 4.5.1. It is finite, with

$$J = \sum_{i=0}^{d} \lim_{\lambda \to C^-} \operatorname{tr}(\mathbb{1}_{[0,\lambda]}(T_N(Q_i)).$$

To this family (v_j) is attached a family (u_j) of approximate eigenvectors of $T_N(h)$ in Proposition 4.5.1. Then $E_N = span((u_j)_{1 \leq j \leq J})$ is a subspace of $L^2(X)$, with small energy: there exists C_1 such that, for every N,

$$\max\{\langle u, T_N(h)u \rangle, u \in E_N, \|u\|_2^2 = 1\} < C' N^{-1} + C_1 N^{-\frac{3}{2}}.$$

We claim that, reciprocally, any function approximately orthogonal with E_N has an energy bounded from below:

Proposition 4.5.2. *Let $C' > 0$ as before. There exists $\epsilon_0 > 0$ and a function $\epsilon \mapsto N_0(\epsilon)$ such that, for $0 < \epsilon < \epsilon_0$, the following is true. Let v_N be a normalized eigenfunction of $T_N(h)$, with associated eigenvalue λ_N, and suppose that the angle between v_N and E_N is greater than $\cos^{-1}(\epsilon)$, that is, for every $u \in E_N$ normalized, one has $|\langle u, v_N\rangle| < \epsilon$. Then for $N \geq N_0(\epsilon)$, one has*

$$\lambda_N \geq (C' - \epsilon)N^{-1}.$$

Proof. Let $P_0, \ldots, P_d$ denote the points at which h cancels. If $\lambda_N = O(N^{-1})$, then v_N concentrates on the P_i's. We decompose $v_N = v_{0,N} + v_{1,N} + \ldots + v_{d,N} + O(N^{-\infty})$, where each $v_{i,N}$ concentrates only on P_i by Proposition 4.3.1 (here v_N is exactly an eigenfunction of $T_N(h)$).

Let ρ_i be a normal map associated with P_i, and q_i the Hessian of h at P_i read in the map ρ_i. Let $E_{i,N}$ be the span of eigenfunctions of $T_N(q_i)$ whose eigenvalues are less than $C'N^{-1}$. Then for N large, for every normalized $u \in E_{i,N}$, one has $|\langle \rho_i^* v_{i,N}, u\rangle| \leq 2\epsilon$. Indeed functions in E_N are $N^{-1/2}$-close to sums of pull-backs of functions in $E_{i,N}$.

Hence, for N large enough,

$$\langle \rho_i^* v_{i,N}, \Pi_N(q_i - C'N^{-1})\Pi_N \rho_i^* v_{i,N}\rangle \geq -C'N^{-1}(4\epsilon^2).$$

Since $v_{i,N}$ concentrates on P_i, one can deduce that, for N large enough,

$$\langle v_{i,N}, S_N h S_N v_{i,N}\rangle \geq C'N^{-1}\|v_{i,N}\|^2 - C'N^{-1}(5\epsilon^2),$$

hence

$$\langle v_N, S_N h S_N v_N\rangle \geq C'N^{-1} - C'N^{-1}(5(d+2)\epsilon^2).$$

To conclude, we let $\epsilon_0 = \dfrac{1}{5(d+2)C'}$. Then for every $\epsilon < \epsilon_0$, for N large enough,

$$\langle v_N, S_N h S_N v_N\rangle \geq (C' - \epsilon)N^{-1}.$$

□

To conclude the proof of Theorem 4.2, if the rank of the spectral projector of $T_N(h)$ with interval $[0, CN^{-1}]$ was greater than K, then one could find an eigenfunction of $T_N(h)$ which forms an angle greater than $\cos^{-1}(N^{-1})$ with E_N, and with eigenvalue less than CN^{-1}. This is absurd since $C < C'$.

5

SUBPRINCIPAL EFFECTS ON LOCALIZATION

The computation of ground states for quantum systems is an ubiquitous problem of great difficulty in the non-integrable case, such as antiferromagnetic spin models on lattices in several dimensions. On those systems, approaches in the large spin limit are commonly used [SL97; Lec+97; RB93; Chu92], in an effort to reduce the problem to the study of the minimal set of the classical energy. A general procedure of *semiclassical order by disorder* was proposed by Douçot and Simon [DS98], in situations where this classical minimal set is not discrete.

In the mathematical setting of Schrödinger operators in the semiclassical limit, a general study of ground state properties was done by Helffer and Sjöstrand [HS84; HS86a], including situations where the minimal set of the potential is a smooth submanifold. The classical phase space of spin systems, a product of spheres, is compact. In particular, spin systems are neither Schrödinger operators nor given by Weyl quantization. However, spin operators are example of Toeplitz operators, which allows to understand the large spin limit as a semiclassical limit. In Chapter 4 we studied the low-energy states of Toeplitz operators in the case where the minimal set of the symbol consists in non-degenerate minimal points; to this end we introduced the Melin value (see Definition 4.2.7) associated with a quadratic form on $\mathbb{R}^{2n}$ identified as $\mathbb{C}^n$.

In frustrated antiferromagnetic spin systems, such as on the Kagome lattice, the minimal set of the classical energy does not form a smooth submanifold. The goal of this chapter is to not only to extend the degenerate case [HS86a] to Toeplitz quantization, but also to generalise the geometrical conditions on the zero set of the classical energy.

In this chapter we present several results of *quantum selection*: not all points of classical phase space where the energy is minimal are equivalent for quantum systems; and the semiclassical quantum ground state localises only on a subset of the classical minimal set. To do so, on one hand we develop techniques which are proper to Toeplitz quantization; on the other hand we prove new symplectic normal forms which are also useful in the context of pseudodifferential calculus.

The work presented in this chapter are contained in the article [Del17].

This chapter is organised as follows: Section 5.1 presents the main results on quantum selection. In Section 5.2 we prove the Melin estimate, which is used to complete the proof of a general result on quantum selection (Theorem 5.1) in Section 5.3. Sections 5.4 and Section 5.5 respectively contain the proofs of Theorems 5.2 and 5.3, which give precise information on particular cases in which quantum selection takes place. The common strategy consists in a symplectic reduction of the classical problem, from which we simplify the quantum problem using the properties of quantum maps in Proposition 2.3.6. We then solve the eigenvalue equation by a delicate perturbation argument, then use the Melin estimate to conclude. In Section 5.6 we compare the asymptotic Weyl law in the situations of Theorems 5.2 and 5.3. To conclude, in Section 5.7 we discuss applications to frustrated spin systems.

5.1 Quantum selection

5.1.1 Main results

In order to state the main theorems we need to introduce the criterion under which localisation takes place.

Let $h = \sum_{k=0}^{+\infty} N^{-i} h_i + O(N^{-\infty})$ be a classical symbol on a compact quantizable manifold M and suppose $\min(h_0) = 0$. The selection criterion is a function μ which generalises Definition 4.2.7. This function is defined on $\{h_0 = 0\}$, and depends on the Hessian of h_0. It captures the effects of order N^{-1} on the low-energy spectrum of $T_N(h)$. For each point x such that $h_0(x) = 0$, we call $\mu(x)$ the *Melin value* at x.

Definition 5.1.1. Let M be a Kähler manifold and let h be a classical symbol on M with $h_0 \geq 0$. Let $P_0 \in M$ be such that $h_0(P_0) = 0$. Let ρ be a normal map around P_0; the function $h_0 \circ \rho$ is well-defined and non-negative on a neighbourhood of 0 in $\mathbb{C}^n$, and the image of 0 is 0. Hence, there exists a semi-definite positive quadratic form Q such that

$$h_0 \circ \rho(x) = Q(x) + O(|x|^3).$$

We define the Melin value $\mu(P_0)$ as $\mu(Q) + h_1(P_0)$.

Remark 5.1.2. A different choice of normal coordinates corresponds to a $U(n)$ change of variables for Q, under which $\mu(Q)$ is invariant. Hence, $\mu(P_0)$ does not depend on the choice of normal coordinates.

The function $P_0 \mapsto \mu(P_0)$ is $\frac{1}{2n}$-Hölder continuous on the metric space $\{h_0 = 0\}$ as a composition of the smooth function $P_0 \mapsto Q$ and the Hölder continuous function $Q \mapsto \mu$.

Theorem 5.1. *Let M be a compact Kähler quantizable manifold and let h be a classical symbol on M. Suppose that $\min(h_0) = 0$. Let μ be the function associating to each point where h_0 vanishes the Melin value at this point. Let*

$$\mu_{\min} = \min(\mu(x), x \in M, h_0(x) = 0).$$

Then, as $N \to +\infty$, one has

$$|\min \mathrm{Sp}(T_N(h)) - N^{-1}\mu_{\min}| = o(N^{-1}).$$

Let $((\lambda_N, u_N))_{N\geq 1}$ be a sequence of eigenpairs of $(T_N(h))_{N\geq 1}$. If $\|u_N\|_{L^2} = 1$ and $\lambda_N \leq N^{-1}(\mu_{min} + C)$ for some $C > 0$, for any open set U at positive distance from

$$\{x \in M, h_0(x) = 0, \mu(x) \leq \mu_{\min} + C\},$$

as $N \to +\infty$ there holds

$$\int_{\pi^{-1}(U)} |u_N|^2 \mathrm{d}Vol = O(N^{-\infty}).$$

Theorem 5.2. *Under the hypotheses of Theorem 5.1, suppose that the function μ reaches its minimum on a unique point P_0. Suppose further that, in a neighbourhood of P_0, the set $\{h_0 = 0\}$ is an isotropic submanifold of M, on which h_0 has non-degenerate transverse Hessian matrix. Then μ is a smooth function on this piece of*

isotropic submanifold. Finally, suppose that, near P_0, along $\{h_0 = 0\}$, the function μ reaches its minimum in a non-degenerate way.

Then for any sequence $(u_N)_{N\geq 1}$ of unit eigenfunctions corresponding to the first eigenvalue of $T_N(h)$, for any $\epsilon > 0$, one has

$$\int_{\left\{dist(\pi(y),P_0)>N^{-\frac{1}{4}+\epsilon}\right\}} |u_N(y)|^2 \mathrm{d}Vol = O(N^{-\infty}).$$

Moreover, the first eigenvalue is simple and the gap between the two first eigenvalues is of order $N^{-\frac{3}{2}}$. There is a full expansion of the first eigenvalue and eigenvector in powers of $N^{-\frac{1}{4}}$.

In all this chapter, we will informally call "piece of linear subspace" or "piece of submanifold", near a point, the intersection of a linear subspace or a manifold with an open neighbourhood of the point.

If $\{h_0 = 0\}$ is an isotropic submanifold on which h_0 vanishes exactly at order 2, then μ is a smooth function on $\{h_0 = 0\}$ (see Proposition 4.2.4), so that it makes sense to ask for μ to reach its minimum in a non-degenerate way.

Following Helffer-Sjöstrand [HS86a], we will call a point P_0 satisfying the conditions in Theorem 5.2 a *miniwell* for h.

In the situation of Theorem 5.2, the first eigenvector concentrates rapidly on $\{h_0 = 0\}$ (by Proposition 3.2.6, it is $O(N^{-\infty})$ outside a neighbourhood of size $N^{-\frac{1}{2}+\epsilon}$), and the speed of concentration towards the point which minimises μ is much slower (only $N^{-\frac{1}{4}+\epsilon}$). In particular this state is more and more squeezed as N increases.

The expansion of the first eigenvector v_N in powers of $N^{-\frac{1}{4}}$ is indirect. In Section 5.4 we prove that there exists a semiclassical Fourier Integral operator U_N with classical symbol (in powers of N^{-1}), which unitarily maps (up to $O(N^{-\infty})$) elements of $H_N(M)$ localised near P_0 to elements of $L^2(\mathbb{R}^r_q \times \mathbb{R}^{n-r}_x)$, such that $U_N v_N$ takes the form:

$$U_N v_N(x,q) = N^{\frac{n}{2}-\frac{r}{4}} e^{-N\frac{|x|^2}{2}} e^{-\sqrt{N}\phi(q)} \sum_{k=0}^{+\infty} N^{-\frac{k}{4}} b_k\left(N^{\frac{1}{2}}x, N^{\frac{1}{4}}q\right) + O(N^{-\infty}).$$

Here ϕ is a positive definite quadratic form and the b_k's are polynomials; r is the dimension of $\{h_0 = 0\}$ near P_0.

Theorem 5.3. *Under the hypotheses of Theorem 5.1, suppose that the function μ reaches its minimum on a unique point P_0 at which there is a* simple crossing *(see Definition 5.5.1).*

Then for any sequence $(u_N)_{N\geq 1}$ of unit eigenfunctions corresponding to the first eigenvalue of $T_N(h)$, for any $\epsilon > 0$, one has

$$\int_{\left\{dist(\pi(y),P_0)>N^{-\frac{1}{3}+\epsilon}\right\}} |u_N(y)|^2 \mathrm{d}Vol = O(N^{-\infty}).$$

Moreover, the first eigenvalue is simple and the gap between the two first eigenvalues is of order $N^{-\frac{4}{3}}$. There is a full expansion of the first eigenvalue and eigenvector in powers of $N^{-\frac{1}{6}}$.

An example of symbol with a *simple crossing*, with dimensions $(1,1)$, is the following function on $\mathbb{R}^4$:

$$h : (q_1, q_2, p_1, p_2) \mapsto p_1^2 + p_2^2 + q_1^2 q_2^2, \tag{15}$$

which reaches its minimum on the transverse union of two manifolds, $\mathbb{R} \times \{0,0,0\}$ and $\{0\} \times \mathbb{R} \times \{0,0\}$, intersecting at one point. More generally, *simple crossing* implies that, near P_0, the principal symbol h_0 reaches its minimum on a transverse union of isotropic manifolds, such that the sum at P_0 of the two transverse tangent spaces is still isotropic.

As in the case of Theorem 5.2, the first eigenvector is more and more squeezed as $N \to +\infty$. Note that the speed of convergence, and the powers of N involved in the expansions, differ between the two cases.

Again, the expansion of the first eigenvector v_N is indirect: there exists a semi-classical Fourier Integral operator U_N from $H_N(M)$ to $L^2(\mathbb{R}_q^{r_1+r_2} \times \mathbb{R}^{n-r_1-r_2})$ so that

$$U_N v_N = N^{\frac{n}{2} - \frac{r_1+r_2}{6}} e^{-N\frac{|x|^2}{2}} \sum_{k=0}^{+\infty} N^{-\frac{k}{6}} u_k\Big(N^{\frac{1}{2}} x, N^{\frac{1}{3}} q\Big) + O(N^{-\infty}).$$

Here, the functions u_k have polynomial dependence in x and are square-integrable (for fixed x) with respect to q; the dimensions of the pieces of isotropic submanifold crossing at P_0 are r_1 and r_2.

The question now arises of the inverse spectral problem in our setting: given the high N spectrum of a Toeplitz operator, is one able to distinguish the geometry of the set on which the Melin value μ is minimal?

In the situations of Theorems 5.2 and 5.3, μ reaches a strict minimum at the miniwell or the crossing point, respectively. Similarly as in Chapter 4, one can build a symbol containing several miniwells or crossing points. From Theorem 5.1, only those for which μ reaches a global minimum will contribute to low-energy states (of energy less than $N^{-1}(\mu_{\min} + \epsilon)$). Since these miniwells or crossing points are at positive distance from each other, the low-energy spectrum of the full operator is (up to $O(N^{-\infty})$) the collection of the low-energy spectra of operators restricted to a neighbourhood of each of the minimal points for μ. Indeed, one can build $O(N^{-\infty})$ almost eigenfunctions for the full operator, that are supported on a small neighbourhood of any of the minimal points for μ. The next theorem studies the number of such modes in a given spectral window.

Theorem 5.4. *Under the hypotheses of Theorem 5.1, there exist* $0 < c \le C$, $\epsilon > 0$ *and* $N_0 \ge 0$ *such that the following is true. Let* $\mu_{\min}$ *be the infimum of the Melin value, and* $N \ge N_0$.

1. *For each regular miniwell with Melin value* $\mu_{\min}$ *and dimension* r, *for each sequence* (Λ_N) *with*
$$N^{-\frac{1}{2}+\epsilon} \le \Lambda_N \le \epsilon,$$
in the spectral window $[0, N^{-1}(\mu_{\min} + \Lambda_N)]$, *the number of orthogonal almost eigenfunctions of* $T_N(h)$ *supported on a small neighbourhood of the miniwell belongs to the interval*
$$\Big[c(N^{\frac{1}{2}}\Lambda_N)^r, C(N^{\frac{1}{2}}\Lambda_N)^r\Big].$$

2. *For each simple crossing with Melin value* $\mu_{\min}$ *and dimensions* (r, r)*, for each sequence* (Λ_N) *with*
$$N^{-\frac{1}{3}+\epsilon} \leq \Lambda_N \leq \epsilon,$$
in the spectral window $[0, N^{-1}(\mu_{\min} + \Lambda_N)]$*, the number of orthogonal almost eigenfunctions of* $T_N(h)$ *supported on a small neighbourhood of the crossing point belongs to the interval*
$$\left[c(N^{\frac{1}{3}}\Lambda_N)^{\frac{3r}{2}} \log(N^{\frac{1}{3}}\Lambda_N), C(N^{\frac{1}{3}}\Lambda_N)^{\frac{3r}{2}} \log(N^{\frac{1}{3}}\Lambda_N)\right].$$

The notion of dimension of a miniwell and a simple crossing can be found in Definition 5.6.1. In Theorem 5.4, cases 1 and 2 apply respectively in the settings of Theorems 5.2 and 5.3.

Remark 5.1.3.

- If $\Lambda_N < N^{-\epsilon}$, then there are more eigenvalues near a miniwell than near a crossing point (the ratio is of order $N^{\frac{\epsilon}{2}}$). If we look at eigenvalues in such windows, then a miniwell of dimension r not only "hides" miniwells of smaller dimensions, but also crossing points of dimensions up to and including (r, r).

  If $\Lambda_N > \frac{\epsilon}{2}$, then there are more eigenvalues near a crossing point than near a miniwell (the ratio is of order $\log(N)$). In these windows, crossing points hide miniwells of dimension smaller or equal.

  In particular, this proves that the spectral inverse problem allows, not only to recover the value of $\mu_{\min}$, but also to determine the largest dimensions of the miniwells or crossing points achieving $\mu_{\min}$, and to tell whether there are only miniwells, only crossing points, or both.

- In both cases, the number of eigenvalues in the window $[0, N^{-1}(\mu_{\min} + \Lambda_N)]$ does not correspond at all to N^n times the volume of $h_0^{-1}([0, N^{-1}(\mu_{\min}+\Lambda_N)])$, which is always of order $N^{\frac{r}{2}}$, independently on Λ_N. There are far less eigenvalues than volume considerations would suggest.

Theorem 5.4 also allows to study low-temperature quantum states for a model on which there is a competition between a regular point and a crossing point with the same μ. It shows a transition from temperature ranges similar to N^{-1}, for which the Gibbs measure concentrates on the crossing point, and temperature ranges of order $N^{-1-\epsilon}$, for which this measure concentrates on the regular point.

5.1.2 Pseudodifferential operators with degenerate minimal sets

While Theorems 5.1 to 5.4 are stated in the setting of concentration of eigenfunctions in a semiclassical limit, the first mathematical manifestation of quantum selection lies in the fact that some differential operators have compact resolvent because of subprincipal effects. In our setting, the phase space is compact, so that the spectrum always consist of eigenvalues with finite multiplicity, but the fact that the Weyl quantization of the symbol given by (15) has compact resolvent [Rob82; Sim83] for fixed $\hbar$ is already a form of quantum selection. A simple proof for this fact is recalled in Proposition 5.5.9.

A broad class of differential operators admitting a compact resolvent because of lower-order effects was identified in [HN85]. For such operators, and in particular

for Schrödinger or magnetic Schrödinger operators with polynomial coefficients, one can then study Weyl laws [Rob82; Tru97; MT00] (in particular, the number of eigenvalues in a low-energy window is not given by the volume of its preimage by the symbol), speed of decay of eigenfunctions [HN92; Bru91], and the construction of quasimodes [HS86a; Mar89; Mar94b; HM96; HM01; MT06; Tru08; HK09; RN15; Hel+16; BHR16].

Because of its higher degree of geometrical generality, the case of general Schrödinger or magnetic Schrödinger operators with a submanifold as classical minimal set is of greater interest in our discussion; let us present here it in detail. The article [HS86a] treats the case of an operator of the form $-\hbar^2\Delta + V$, on $L^2(\mathbb{R}^n)$, under the following hypotheses:

- $V \in C^\infty(\mathbb{R}^*, \mathbb{R})$; $V \geq 1$ at infinity.
- $\{V = 0\} = Z$ is a compact submanifold of $\mathbb{R}^n$.
- The transverse Hessian of V on Z is everywhere non-degenerate.
- The trace of the square root of the Hessian of V, as a function on Z, reaches a unique, non-degenerate minimum ("miniwell" condition)

Under these conditions, the authors show that the ground state of the Schrödinger operator is localised at the minimal point for this trace, and give asymptotic expansions for the ground state and its energy, as well as an exponential decay rate along Z.

The trace of the square root of a semidefinite form Q coincides with the ground state energy of $-\Delta + Q$, giving a physical interpretation for the result of concentration: as in Chapter 4, the ground state only concentrates at the points near which the energy contributions of order $\hbar$ are the lowest.

The geometry of the zero set of the symbol $|\xi|^2 + V$, under the hypotheses above, is as follows: it is a smooth submanifold, isotropic for the symplectic form, on which the symbol vanishes at order exactly 2.

Motivated by supraconductivity, a series of articles [HM96; HM01; HK09; RN15; Hel+16; BHR16] consider the problem of "magnetic bottles", that is, the analysis of the ground state of a purely magnetic Schrödinger operator

$$(i\hbar \mathrm{d} + \alpha)^*(i\hbar \mathrm{d} + \alpha)$$

acting on $L^2(\mathbb{R}^n)$, associated with a 1-form α. The 2-form $\mathrm{d}\alpha$ can be seen as an (anti-symmetric) linear operator $B : TM \to TM$ using the standard metric.

The low-lying eigenvalues of the operator above are then linked to the behaviour of $\mathrm{tr}\left[(B^*B)^{1/2}\right]$. The parallel with the "miniwell" case is obvious from a geometrical perspective. Here the zero set of the symbol is the smooth manifold $\{\xi = \alpha\}$, on which the symbol vanishes at order exactly 2. Moreover, the quantity $\mathrm{tr}\left[(B^*B)^{1/2}\right]$ again coincides with the ground state energy of the quadratic operator at the zero point. A particularity of this model is that the symplectic rank of $\{\xi = \alpha\}$ is arbitrary and may vary with the base point; the most precise results (giving eigenfunction expansions) assume that the symplectic rank is constant (or at least good-behaved) at the points of interest. In Theorem 5.2, we focus on symbols that are minimal on an isotropic submanifolds, but the classical normal form and the quasimode construction of Section 5.4 can be adapted to the case of a submanifold with constant symplectic rank.

An essential feature of the work above is a family of Melin-type estimates, which give a lower bound to the spectrum of an operator depending on the quantum ground state energy of the Hessian (Melin value) along the zero set. The original result by Melin [Mel71] is concerned with general pseudodifferential operators (without a semiclassical parameter). In the magnetic case, a semiclassical version of the Melin estimate was given in [HM96].

Most of the results that we just described use not only the geometric (that is, microlocal) structure of the symbol near its minimal set, but also the specific form of the operator, which allows one, for instance, to conjugate the operator with multiplication operators of the form $\exp(\phi/h^\alpha)$. The generalisation of these results to arbitrary pseudodifferential operators verifying the same geometric hypotheses is lacking. In this chapter, while restricting ourselves to compact geometries, we give a version of these results for general symbols, which we present in the formalism of Berezin-Toeplitz quantization but which applies in particular to pseudodifferential operators (if the principal symbol is confining, for instance).

Moreover, a common characteristic of the "miniwell" and "magnetic well" framework is the fact that the classical minimal set is a smooth submanifold, on which the symbol vanishes in a non-degenerate way. Lifting this hypothesis is necessary in order to understand quantum selection on the Kagome lattice (for which the classical minimal set is an algebraic manifold). In Theorem 5.1 we prove that the Melin value is, in general, a criterion for localisation of the ground state.

5.2 A Melin estimate for Toeplitz quantization

Before stating (and proving) the Melin estimate, let us give two lemmas.

Lemma 5.2.1. *Let Y be a compact Riemannian manifold. There exist two positive constants C and a_0 such that, for every positive integrable function f on Y, for every $0 < a < a_0$ and $t \in (0,1)$, there exists a finite family $(U_j)_{j\in J}$ of open subsets covering Y with the following properties:*

$$\forall j \in J,\ \operatorname{diam}(U_j) < a$$

$$\forall j \in J,\ \operatorname{dist}\left(Y \setminus U_j, Y \setminus \bigcup_{i\neq j} U_i\right) \geq ta$$

$$\sum_{i\neq j} \int_{U_i\cap U_j} f \leq Ct \int_Y f.$$

Proof. Let $m \in \mathbb{N}$ be such that there exists a smooth embedding of differential manifolds from Y to $\mathbb{R}^m$, and let Φ be such an embedding. Φ may not preserve the Riemannian structure, so let c_1 be such that, for any $\xi \in TY$, one has

$$c_1\|\Phi^*\xi\| \leq \|\xi\|.$$

We now let $L > 0$ be such that any hypercube H in $\mathbb{R}^m$ of side $2/L$ is such that $\operatorname{diam}(\Phi^{-1}(H)) < a$. Since Φ^{-1} is uniformly Lipschitz continuous, then if a is small enough one has $aL \leq C_1$ for some C_1 depending only on Y.

We then prove the claim with $C = \frac{2mC_1}{c_1}$.

Let $1 \leq k \leq m$, and let Φ_k denote the k-th component of Φ. The function Φ_k is continuous from Y onto a segment of $\mathbb{R}$. Without loss of generality this segment is

$[0,1]$. Let g_k denote the integral of f along the level sets of Φ_k. The function g_k is a positive integrable function on $[0,1]$. Let $t' > 0$ be the inverse of an integer, and $0 \le \ell \le L-1$. In the interval $[\ell/L, (\ell+1)/L]$, there exists a subinterval I, of length t'/L, such that

$$\int_I g_k \le t' \int_{\ell/L}^{(\ell+1)/L} g_k. \tag{16}$$

Indeed, one can cut the interval $[\ell/L, (\ell+1)/L]$ into $1/t'$ intervals of size t'/L. If none of these intervals was verifying (16), then the total integral would be strictly greater than itself.

Let $x_{k,\ell}$ denote the centre of such an interval. Then, let

$$\begin{aligned} V_{k,0} &= \left[0, x_{k,0} + \frac{t'}{2L}\right) \\ V_{k,\ell} &= \left(x_{k,\ell-1} - \frac{t'}{2L}, x_{k,\ell} + \frac{t'}{2L}\right) \text{ for } 1 \le \ell \le L \\ V_{k,L+1} &= \left(x_{k,L} - \frac{t'}{2L}, 1\right]. \end{aligned}$$

Each open set $V_{k,l}$ has a length smaller than $2/L$. The overlap of two consecutive sets has a length t'/L, and the sum over k of the integrals on the overlaps is less than $t' \int_0^1 g_k = t' \int_Y f$.

Now let ν denote a polyindex $(\nu_k)_{1 \le k \le m}$, with $\nu_k \le L+1$ for every k. Define

$$U_\nu = \Phi^{-1}(V_{1,\nu_1} \times V_{2,\nu_2} \times \ldots \times V_{m,\nu_m}).$$

Then the family $(U_\nu)_\nu$ covers Y. For every polyindex ν one has $\operatorname{diam} U_\nu \le a$ since U_ν is the pull-back of an open set contained in a hypercube of side $2/L$. Moreover, one has

$$\operatorname{dist}\left(Y \setminus U_\nu, Y \setminus \bigcup_{\nu' \ne \nu} U_{\nu'}\right) \ge \frac{c_1 t'}{L}.$$

To conclude, observe that

$$\sum_{\nu \ne \nu'} \int_{U_\nu \cap U_{\nu'}} f = \sum_{k=1}^{m} \sum_{\ell=0}^{L} \int_{V_{k,\ell} \cap V_{k,\ell+1}} g_k \le m t' \int_Y f.$$

It only remains to choose t' conveniently. The fraction $t\frac{aL}{c_1}$ may not be the inverse of an integer; however the inverse of some integer lies in $[\frac{aL}{2c_1}, \frac{aL}{c_1}]$. This allow us to conclude. □

Remark 5.2.2. In the previous Lemma, the number of elements of J is bounded by a polynomial in a that depends only on the geometry of Y.

Lemma 5.2.3. *Let $f \in C^3(\mathbb{R}, \mathbb{R}^+)$ and suppose that $|f^{(3)}| \le K$. Then*

$$f'' \ge -\left(\frac{3K^2 f}{2}\right)^{\frac{1}{3}}.$$

Proof. Let $x_0 \in \mathbb{R}$. Without loss of generality $f'(x_0) \leq 0$ (otherwise we compose f with $x \mapsto 2x_0 - x$). Since f'' is uniformly Lipschitz-continuous, for all $x \geq x_0$ there holds

$$f''(x) \leq f''(x_0) + K(x - x_0).$$

Integrating twice yields

$$f(x) \leq f(x_0) + f'(x_0)(x - x_0) + \frac{f''(x_0)}{2}(x - x_0)^2 + \frac{K}{6}(x - x_0)^3.$$

Since $f'(x_0) \leq 0$, one has

$$f(x) \leq f(x_0) + \frac{f''(x_0)}{2}(x - x_0)^2 + \frac{K}{6}(x - x_0)^3.$$

If $f''(x_0) \geq 0$ there is nothing to prove. Otherwise, the function

$$x \mapsto f(x_0) - \frac{f''(x_0)}{2}(x - x_0)^2 + \frac{K}{6}(x - x_0)^3$$

reaches a local minimum at

$$x_1 = x_0 - \frac{2f''(x_0)}{K},$$

and

$$0 \leq f(x_1) = f(x_0) + \frac{2(f''(x_0))^3}{K^2} - \frac{4(f''(x_0))^3}{3K^2} = f(x_0) + \frac{2f''(x_0)^3}{3K^2}.$$

In particular,

$$f''(x_0) \geq -\left(\frac{3K^2 f(x_0)}{2}\right)^{\frac{1}{3}},$$

hence the claim. □

We are now in position to state, and prove, a Toeplitz version of the well-known Melin estimate for pseudodifferential estimates. It requires a weak condition on the speed of growth of the symbol near its zero set.

Proposition 5.2.4 (Melin estimate)**.** *Let $h \in C^\infty(M, \mathbb{R}^+)$ with $\min(h) = 0$. Let*

$$\mu_{\min} = \min_{h(x)=0}(\mu(x)).$$

Then

$$\min \mathrm{Sp}(T_N(h)) \geq \mu_{\min} N^{-1} - o(N^{-1}).$$

The remainder depends on M and h. In particular, if there exist $C > 0$ and $\alpha > 0$ such that, for every $t \geq 0$, one has

$$\mathrm{dist}_{Hausdorff}(\{h \leq t\}, \{h = 0\}) \leq Ct^\alpha,$$

then there exist $\varepsilon > 0$, N_0 and $C' > 0$ such that, for every $N \geq N_0$, one has

$$\min \mathrm{Sp}(T_N(h)) \geq \mu_{\min} N^{-1} - C' N^{-1-\varepsilon}.$$

The more precise result is a generalisation of [HS86a] (where $\epsilon = \frac{1}{2}$), [HM96] (in which case $\epsilon = \frac{1}{4}$), [HK09] ($\epsilon = 1$). The sharpest possible ϵ depends on the geometry of the problem. We will actually see that, in the settings of Theorems 5.2 and 5.3, there holds $T_N(h) \geq \mu_{\min} N^{-1}$. We don't know whether or not $T_N(h) \geq \mu_{\min} N^{-1}$ is true for any $h \in C^\infty(M, \mathbb{R}^+)$.

Proof. We begin with a local result: for all δ_0, δ_1 small enough and a real sequence $g(N) \underset{N\to+\infty}{\longrightarrow} 0$ such that, for every $x \in M$ with $h(x) < N^{-1+\delta_1}$, for every $u \in L^2(X)$ supported on $B(x, N^{-\frac{1}{2}+\delta_0}) \times \mathbb{S}^1$, one has

$$\langle S_N u, h S_N u\rangle \geq (\mu_{\min} N^{-1} - N^{-1} g(N)) \|S_N u\|^2.$$

To this end, we modify h_0 near x into a convex function $\widetilde{h_0}$ (so that, when comparing $\widetilde{h_0}$ to its Hessian at a critical point, the Hessian will be semipositive and we will be able to consider its Melin value).

Indeed, by Lemma 5.2.3, one has

$$\mathrm{Hess}(h_0)(x) \geq -CN^{(-1+\delta_1)/3}.$$

The following perturbation of h_0 is convex on $B(x, N^{-\frac{1}{2}+\delta_0})$:

$$\widetilde{h_0} : y \mapsto h_0(y) + CN^{\max((-1+\delta_1)/3, -1/2+\delta_0)} \operatorname{dist}(y, x)^2.$$

If now $u \in L^2(X)$ is normalized and supported on $B(x, N^{-\frac{1}{2}+\delta_0}) \times \mathbb{S}^1$, and if $S_N u = u + O(N^{-\infty})$, one has

$$\left|\langle S_N u, (h_0 - \widetilde{h_0}) S_N u\rangle\right| \leq CN^{-1+2\delta_0+\max((-1+\delta_1)/3, -1/2+\delta_0)}.$$

As $\sqrt{h_0}$ is Lipschitz-continuous (see Lemma 4.31 in [Zwo12]), one has

$$\sup\Big(\sqrt{h_0(y)}, \operatorname{dist}(y, x) < 2N^{-\frac{1}{2}+\delta_0}\Big) < CN^{\frac{-1+\delta_1}{2}} + CN^{-\frac{1}{2}+\delta_0}.$$

Hence,

$$\sup\Big(h_0(y), \operatorname{dist}(x, y) < 2N^{-\frac{1}{2}+\delta_0}\Big) < CN^{-1+\max(\delta_1, 2\delta_0)}.$$

Recall from Proposition 3.3.1 that, for δ small enough, for every $x \in M$ with associated normal map ρ, for every u with support inside $\rho(B(0, N^{-\frac{1}{2}+\delta}) \times \mathbb{S}^1)$, one has

$$\|(S_N - \rho^* \Pi_N) u\|_{L^2} < CN^{-\frac{1}{4}}.$$

Hence, if $\delta_0 < \delta$, then, for N large enough, by Proposition 3.3.1,

$$\left|\langle (S_N - \Pi_N^*) u, \widetilde{h_0} S_N u\rangle\right| \leq CN^{-\frac{1}{4}} N^{-1+\max(\delta_1, 2\delta_0)}$$
$$\left|\langle \Pi_N^* u, \widetilde{h_0} (S_N - \Pi_N^*) u\rangle\right| \leq CN^{-\frac{1}{4}} N^{-1+\max(\delta_1, 2\delta_0)}.$$

If the function $\widetilde{h_0}$ reaches its minimum on $B(x, N^{-\frac{1}{2}+\delta_0})$ at an interior point x' and if Q denotes half of the Hessian matrix of $\widetilde{h_0}$ at x', then

$$\left|\langle \Pi_N u^*, \widetilde{h_0}^* - Q, \Pi_N u^*\rangle\right| \leq CN^{-\frac{3}{2}+3\delta_0}.$$

Here, the subscript * denotes the pull-back by the normal map. Similarly $_*$ will denote the push-forward by the normal map.

If $\widetilde{h_0}$ reaches its minimum at a boundary point x', then if L denotes the differential of $\widetilde{h_0}$ at x' one has, by convexity of the ball, for all $y \in B(x, N^{-\frac{1}{2}+\delta_0})$,

$$L(y - x') \geq 0.$$

In particular,

$$\langle \Pi_{N*}u, \widetilde{h_0}\Pi_{N*}u\rangle \geq \langle \Pi_{N*}u, (\widetilde{h_0} - L)\Pi_{N*}u\rangle.$$

Then $y \mapsto \widetilde{h_0}(y) - L(y - x')$ has a critical point at x'. If Q denotes again half of the Hessian matrix of $\widetilde{h_0}$ at x', then

$$\left|\langle \Pi_N u^*, \widetilde{h_0}^* - L - Q, \Pi_N u^*\rangle\right| \leq CN^{-\frac{3}{2}+3\delta_0}.$$

In any case, x' is at distance at most $N^{-\frac{1}{2}+\delta_0}$ of x, and u is supported on a ball around x of same radius, so that

$$\left|N^{-1}\langle S_N u, h_1 S_N u\rangle - h_1(x')\|S_N u\|^2\right| \leq CN^{-\frac{3}{2}+\delta_0}$$
$$\left|\langle S_N u, \sum_{k=2}^{+\infty} N^{-k} h_k S_N u\rangle\right| \leq CN^{-2}.$$

Since

$$\mathrm{dist}(x', \{h = 0\}) \leq \mathrm{dist}_H(\{h_0 = 0\}, \{h \leq N^{-1+\delta_1}\}) + N^{-\frac{1}{2}+\delta_0} = g_0(N) \underset{N\to+\infty}{\longrightarrow} 0,$$

the matrix Q is $g_0(N)$-close to half of the Hessian matrix of h_0 at a zero point (recall we only added $CN^{-\epsilon}I$ to the Hessian matrix of h at x.)

The Melin value μ is Hölder-continuous with exponent $(2n)^{-1}$ on the set of semi-positive quadratic forms [Mel71], hence

$$\mu(Q) + h_1(x') \geq \mu_{\min} + O((g_0(N))^{1/2n}).$$

To conclude, with $g(N) = C(g_0(N))^{1/2n}$, one has

$$\langle S_N u, hS_N u\rangle \geq N^{-1}\mu_{\min} - N^{-1}g(N).$$

Note that, if h_0 satisfies, for some α, for all $t \geq 0$,

$$\mathrm{dist}_{Hausdorff}(\{h_0 \leq t\}, \{h_0 = 0\}) \leq Ct^{\alpha},$$

then $g(N) = N^{-\varepsilon}$ for some ε depending on $\alpha, \delta_0, \delta_1$.

From this local estimate, we deduce a global estimate using Lemma 5.2.1 proved previously, and the general localisation estimate of Proposition 4.3.5.

Indeed, let $(u_N)_{N\geq 1}$ be a sequence of normalised eigenfunctions for $T_N(h)$ with minimal eigenvalue. Either the associated sequence of eigenvalues is not $O(N^{-1})$, in which case the proposition holds, or it is, in which case, by Proposition 4.3.5, u_N is $O(N^{-\infty})$ outside $\{h_0 \leq N^{-1+\delta_1}\}$ for every $\delta_1 > 0$.

We now invoke Lemma 5.2.1 with the following data:

- $Y = M$.

- $f = |u_N|^2$.
- $a = N^{-\frac{1}{2}+\delta_0}$.
- $t = N^{-\frac{\delta_0}{2}}$.

The Lemma yields a sequence of coverings $(U_{j,N})_{j\in J_N, N\in\mathbb{N}}$. The proof also yields a sequence of coverings by slightly smaller open sets $(U'_{j,N})$, with

- $U'_{j,N} \subset U_{j,N}$.
- $d(M \setminus U_{j,N}, U'_{j,N}) > \frac{1}{3}N^{-\frac{1-\delta_0}{2}}$.

Let $(\chi_{j,N})_{j\in J_N, N\in\mathbb{N}}$ be a partition of unity associated with $(U'_{j,N})_{j\in J_N, N\in\mathbb{N}}$.

Before we proceed to the proof, let us show that, for all $g \in C^\infty(M, \mathbb{R}^+)$, as $N \geq 0$, one has

$$\sum_{j\neq k\in J_N} |\langle \chi_{j,N}u_N, T_N(g)\chi_{k,N}u_N\rangle| \leq CN^{-\frac{\delta_0}{2}}\|u_N\|^2_{L^2} \sup_{\{h\leq N^{-1+\delta_1}\}}(g) + O(N^{-\infty}).$$

First, let $U'_{j,N} \subset V_{j,N} \subset U_{j,N}$ be such that

$$d(M \setminus U_{j,N}, V_{j,N}) > \frac{1}{6}N^{-\frac{1-\delta_0}{2}} \qquad d(M \setminus V_{j,N}, U'_{j,N}) > \frac{1}{6}N^{-\frac{1-\delta_0}{2}}.$$

Then $S_N\chi_{j,N}u_N$ is $O(N^{-\infty})$ outside $V_{j,N}$. It is also $O(N^{-\infty})$ outside $\{h \geq N^{-1+\delta_1}\}$ by Proposition 4.3.5.

In particular,

$$\begin{aligned}\langle \chi_{j,N}u_N, T_N(g)\chi_{k,N}u_N\rangle &= \langle S_N\chi_{j,N}u_N, gS_N\chi_{k,N}u_N\rangle \\ &\leq \|S_N\chi_{j,N}u_N\|_{L^2(V_{j,N}\cap V_{k,N})}\|S_N\chi_{k,N}u_N\|_{L^2(V_{j,N}\cap V_{k,N})} \sup_{\{h\geq N^{-1+\delta_1}\}}(g).\end{aligned}$$

Now

$$\begin{aligned}\|S_N\chi_{j,N}u_N\|^2_{L^2(V_{j,N}\cap V_{k,N})} &= \int_{V_{j,N}\cap V_{k,N}} \left|\int_{U'_{j,N}} S_N(x,y)\chi_{j,N}u_N(y)\mathrm{d}y\right|^2 \mathrm{d}x \\ &= \int_{V_{j,N}\cap V_{k,N}} \left|\int_{U'_{j,N}\cap U_{k,N}} S_N(x,y)u_N(y)\mathrm{d}y\right|^2 \mathrm{d}x + O(N^{-\infty}) \\ &\leq \|S_N\chi_{j,N}\mathbb{1}_{U_{k,N}}u_N\|^2 + O(N^{-\infty}) \\ &\leq \||u|^2\|_{L^1(U_{j,N}\cap U_{k,N})} + O(N^{-\infty}).\end{aligned}$$

Then

$$\sum_{j\neq k\in J_N} |\langle \chi_{j,N}u_N, T_N(g)\chi_{k,N}u_N\rangle| \leq \sup_{\{h\leq N^{-1+\delta_1}\}}(g) \sum_{j\neq k\in J_N} \||u|^2\|_{L^1((U_{j,N}\cap U_{k,N}))} + O(N^{-\infty})$$

and one can conclude by Lemma 5.2.1. (The $O(N^{-\infty})$ can be summed over J_N^2 since the latter has a number of elements bounded by a polynomial in N by Remark 5.2.2.)

In particular, with $g = h$, there holds

$$\sum_{j \neq k \in J_N} |\langle \chi_{j,N} u_N, T_N(h) \chi_{k,N} u_N \rangle| \leq C N^{-1+\delta_1} N^{-\frac{\delta_0}{2}} + O(N^{-\infty}).$$

In particular, if $\delta_1 < \delta_0/2$, then

$$\sum_{j \neq k \in J_N} |\langle \chi_{j,N} u_N, T_N(h) \chi_{k,N} u_N \rangle| = O(N^{-1-\epsilon}).$$

On the other hand,

$$\sum_{j \in J_N} \langle \chi_{j,N} u_N, T_N(h) \chi_{j,N} u_N \rangle \geq (\mu_{\min} N^{-1} - N^{-1} g(N)) \sum_{j \in J_N} \|S_N \chi_{j,N} u_N\|_{L^2}^2.$$

With $g = 1$, one has in turn

$$\sum_{j \neq k \in J_N} |\langle \chi_{j,N} u_N, \chi_{k,N} u_N \rangle| \leq N^{-\frac{\delta_0}{2}}$$

so that, since $\sum_j \chi_{j,N} = 1$,

$$\sum_{j \in J_N} \|S_N \chi_{j,N} u_N\|_{L^2}^2 \geq (1 - C N^{-\frac{\delta_0}{2}}).$$

Then, choosing $\delta_1 < \frac{\delta_0}{2}$ allows us to conclude:

$$\langle u_N, T_N(h) u_N \rangle \geq N^{-1}(\mu_{\min} - g(N)).$$

□

Note that, in the last proof, it is essential that we know beforehand that u_N is $O(N^{-\infty})$ on $\{h_0 \geq N^{-1+\delta}\}$ for every $\delta > 0$. This was achieved by picking u_N as the unique minimizer of $\langle u, T_N(h) u \rangle$ under $\|u\| = 1$, in which case u_N is an eigenfunction of $T_N(h)$.

Remark 5.2.5. Proposition 5.2.4 only relies on elementary properties of the Szegő kernel and Toeplitz operators (that is, Propositions 3.2.1 and 3.3.1). As such, it extends readily to more general contexts of quantizations, such as Spin^c-Dirac [MM07] (up to a modification in the definition of $\mu_{\min}$).

5.3 Quantum selection in the general setting

5.3.1 Pseudo-locality of the resolvent

Proposition 5.3.1. *Let h and $\mu_{\min}$ be as in Proposition 5.2.4. Then, for every $c > 0$, the operator $T_N(h - N^{-1}(\mu_{\min} - c))$ is invertible (as a positive definite operator on a finite-dimensional space). Its inverse R is pseudo-local: if a and b are smooth functions with* $\operatorname{supp}(a) \cap \operatorname{supp}(b) = \emptyset$, *then*

$$T_N(a) R T_N(b) = O_{L^2 \to L^2}(N^{-\infty}).$$

Proof. The proposition may be reformulated this way: if $U \subset\subset V$ are two open sets in M and a sequence $(u_N)_{N\geq 1}$ of normalised states in $H_N(M)$ is such that

$$T_N(h - N^{-1}\mu_{\min} + cN^{-1})u_N = O_{L^2}(N^{-\infty})$$

on V, then we wish to prove that $u_N = O_{L^2}(N^{-\infty})$ on U. Here

$$\operatorname{supp}(a) \subset\subset U \subset\subset V \subset\subset (M \setminus \operatorname{supp}(b)).$$

We first remark that, for every δ, and for every $U \subset\subset V_1 \subset\subset V$, the following holds:

$$\int_V \overline{u}\, T_N(h)u \geq CN^{-1+\delta} \int_{V_1 \cap \{h_0 \geq N^{-1-\delta}\}} |u|^2.$$

Hence, u is $O(N^{-\infty})$ on $V_1 \cap \{h_0 \geq N^{-1-\delta}\}$ for every δ.

We are now able to repeat the global part of the proof of Proposition 5.2.4 by cutting a neighbourhood of U into small pieces, hence the claim. □

5.3.2 Upper estimate of the first eigenvalue

Proposition 5.3.2. *Let h be a classical symbol on M with $\min(h_0) = 0$ and let $\mu_{\min}$ be as in Proposition 5.2.4. Then there exists $\epsilon > 0$ such that*

$$\inf Sp(T_N(h)) \leq N^{-1}\mu_{\min} + N^{-1-\epsilon}.$$

Proof. The spirit of the proof is to test $T_N(h)$ against an eigenstate of a quadratic operator $T_N(\operatorname{Hess}(h_0)(P_0))$, where μ is minimal at P_0. However, since $\operatorname{Hess}(h_0)(x_0)$ is only semi-positive, its ground state may have no sense as an L^2 function or fail to localise at x_0. We slighlty modify h_0 in the neighbourhood of P_0 so that the Hessian is non-degenerate.

Let $P_0 \in M$ achieve the minimal value $\mu_{\min}$, let ρ be a normal map around P_0 and, following Proposition 3.3.1, let $\delta > 0$ and $C > 0$ be such that, for every N, for every u supported on $B(P_0, N^{-\frac{1}{2}+\delta}) \times \mathbb{S}^1$, one has $\|(S_N - \rho^*\Pi_N)u\| \leq CN^{-\frac{1}{4}}$. Without loss of generality $\delta < \frac{1}{8}$.

Pick $\alpha < 2\delta$, and let Q denote half of the Hessian of h_0 at P_0. Then, since the function $Q \mapsto \mu(Q)$ is Hölder continuous with exponent $\frac{1}{2n}$ [Mel71], one has

$$\mu(Q + N^{-\alpha}|\cdot|^2) \leq \mu(Q) + CN^{-\frac{\alpha}{2n}}.$$

Let v_N denote a normalised ground state of $T_N(Q + N^{-\alpha}|\cdot|^2)$, then v_N is $O(N^{-\infty})$ outside $B(0, N^{-\frac{1}{2}+\delta})$ by Proposition 4.3.5.

Then

$$\begin{aligned}
\langle \rho_* v_N, T_N(h_0)\rho_* v_N\rangle &= \langle v_N, \Pi_N(h_0 \circ \rho)\Pi_N v_N\rangle + O(N^{-\frac{5}{4}+2\delta}) \\
&= \langle v_N, \Pi_N Q \Pi_N v_N\rangle + O(N^{-\frac{5}{4}+2\delta}) + O(N^{-\frac{3}{2}+3\delta}) \\
&\leq \langle v_N, \Pi_N(Q + N^{-\alpha}|\cdot|^2)\Pi_N v_N\rangle + O(N^{-\frac{5}{4}+2\delta}) + O(N^{-\frac{3}{2}+3\delta}) \\
&= N^{-1}\mu(Q + N^{-\alpha}|\cdot|^2) + O(N^{-\frac{5}{4}+2\delta}) + O(N^{-\frac{3}{2}+3\delta}) \\
&\leq N^{-1}\mu(Q) + O(N^{-1-\alpha/2n}) + O(N^{-\frac{5}{4}+2\delta}) + O(N^{-\frac{3}{2}+3\delta}) \\
&= N^{-1}\mu(Q) + O(N^{-1-\epsilon})
\end{aligned}$$

for some $\epsilon > 0$.

In particular, since for all $y \in B(P_0, N^{-\frac{1}{2}+\delta})$ one has $h_1(y) \leq h_1(x) - CN^{-\frac{1}{2}+\delta}$, one has

$$\langle \rho_* v_N, T_N(h)\rho_* v_N \rangle \leq N^{-1}\mu_{\min} + O(N^{-1-\epsilon}).$$

□

5.3.3 End of the proof

We can now conclude the proof of Theorem 5.1. The estimate on the first eigenvalue consists in Propositions 5.2.4 and 5.3.2.

Let $C > 0$, and let $(u_N)_{N\in\mathbb{N}}$ be a sequence of eigenfunctions of $T_N(h)$, with eigenvalues λ_N smaller than $N^{-1}(\mu_{\min} + C)$.

Let $a \in C^\infty(M, \mathbb{R})$ be supported away from $\{x \in M, h_0(x) = 0, \mu(x) \leq \mu_{\min} + C\}$. Let $\tilde{h}$ be a classical symbol on M such that $\tilde{h} = h$ on a neighbourhood of the support of a, and such that $\mu_{\min}(\tilde{h}) > \mu_{\min}(h) = C$. Then $T_N(\tilde{h} - N^{-1}\lambda_N)$ is invertible because of the Melin estimate of Proposition 5.2.4. Its inverse R is pseudolocal, with norm $O(N)$, by Proposition 5.3.1. In particular,

$$\begin{aligned} T_N(a)u_N &= T_N(a)RT_N(\tilde{h} - N^{-1}\lambda_N)u_N \\ &= T_N(a)RT_N(\tilde{h} - h)u_N \\ &= O(N^{-\infty}). \end{aligned}$$

This concludes the proof of Theorem 5.1.

5.4 Normal form for miniwells

In this section we prove Theorem 5.2, and establish the necessary material for the Weyl asymptotics of Section 5.6.

We first study a problem of symplectic geometry, which consists in finding a normal form for a non-negative function h_0 vanishing at order 2 on an isotropic submanifold. Then, we apply a Quantum Map to find an expansion of the first eigenvalue and eigenfunction.

We let M be a compact quantizable Kähler manifold and h be a classical symbol on M which satisfies the hypotheses of Theorem 5.2.

5.4.1 A convenient chart

Recall the following well-known application of Moser's principle:

Proposition 5.4.1. *Let S be a symplectic manifold and $Z \subset S$ be a smooth d-dimensional submanifold of constant symplectic rank. Then, in a neighbourhood (in S) of any point in Z, there is a symplectomorphism ρ onto a neighbourhood 0 of $\mathbb{R}^{2n}$, such that $\rho(Z)$ is the intersection of a linear subspace with an open neighbourhood of zero in $\mathbb{R}^{2n}$.*

Using Propositions 5.4.1 and 4.2.4, we will prove the normal form for miniwells on isotropic submanifolds:

Proposition 5.4.2. *Let h_0 be a smooth non-negative function on M, which vanishes on an isotropic manifold Z of dimension r with everywhere non-degenerate transverse Hessian.*

Near any point of Z, there is a symplectomorphism ρ into $\mathbb{R}^{2r}_{q,p} \times \mathbb{R}^{2(n-r)}_{x,\xi}$, a smooth function Q_S from $\mathbb{R}^r$ into the set of positive quadratic forms of dimension r, and $n-r$ smooth positive functions $(\lambda_i)_{1\leq i\leq n-r}$ such that:

$$h_0 \circ \rho = Q_F^{red}(q)(x,\xi) + Q_S(q)(p) + O_{(x,\xi,p)\to 0}(|x|^3 + |\xi|^3 + |p|^3),$$

where, for every q close to 0, the ground state of $T_N((x,\xi) \mapsto Q_F^{red}(q)(x,\xi))$ is the standard Gaussian.

In particular, Z is mapped into $\{(p,x,\xi) = 0\}$.

Proof. Let $P_0 \in Z$, and let U be a small neighbourhood of P_0 in M. Let us use Proposition 4.2.4 with set of parameters $Z \cap U$ and quadratic form $\mathrm{Hess}(h_0)$, which is semi-positive definite along $Z \cap U$, with kernel of constant symplectic rank.

This yields, at each point of Z in a neighbourhood of P_0, a family of $2n$ vector fields which form a symplectic basis:

$$\mathcal{B} = (Q_1, \dots, Q_r, P_1, \dots, P_r, X_1, \dots, X_{n-r}, \Xi_1, \dots, \Xi_{n-r}),$$

such that $\mathrm{span}(Q_1, \dots, Q_r) = TZ$. In the general setting, this does not give a symplectic change of variables under which the quadratic form is diagonal along the whole zero set (indeed, $Q_1, \dots, Q_r$ are prescribed by the $2n-r$ other vector fields, and do not commute in general). However, one can separate the slow variables and the fast variables (first step), then diagonalise the fast variables (second step).

First step: Let us define the distribution $\mathcal{F}$ on $Z \cap U$ as follows: for $x \in Z \cap U$,

$$\mathcal{F}_x = \mathrm{span}(Q_1, \dots, Q_r, P_1, \dots, P_r)(x).$$

Then $T(Z \cap U) \subset \mathcal{F}$. In particular, there is a piece S of symplectic submanifold of M, containing $Z \cap U$, and tangent to $\mathcal{F}$ on $Z \cap U$.

Using Proposition 5.4.1, we let ϕ_0 be a symplectomorphism from a neighbourhood of P_0 in M into a neighbourhood of 0 in $\mathbb{R}^{2r} \times \mathbb{R}^{2(n-r)}$, such that S is mapped into $\mathbb{R}^{2r} \times \{0\}$. Using Proposition 5.4.1 again, let ϕ_1 be a symplectomorphism on a neighbourhood of 0 in $\mathbb{R}^{2r}$, that maps $\phi_0(Z)$ into $\mathbb{R}^r \times \{0\}$. Then the map $\tilde{\phi}_1$ acting on $\mathbb{R}^{2r} \times \mathbb{R}^{2(n-r)}$ by

$$\tilde{\phi}_1(p,q,x,\xi) = (\phi_1(p,q), x, \xi)$$

is a symplectomorphism. We claim that $\rho = \tilde{\phi}_1 \circ \phi_0$ separates the fast variables from the slow variables up to $O((x,\xi,p)^3)$.

Indeed, consider $D\rho$ at a point of Z. Since ρ sends Z into $\mathbb{R}^r \times \{0\}$, and S into $\mathbb{R}^{2r} \times \{0\}$, the matrix of $D\rho$, from the basis $\mathcal{B}$ to the canonical basis, is of the form:

$$D\rho = \left(\begin{array}{cc|cc} A_{qq} & 0 & 0 & 0 \\ A_{pq} & A_{pp} & 0 & 0 \\ \hline A_{xq} & A_{xp} & A_{xx} & A_{x\xi} \\ A_{\xi q} & A_{\xi p} & A_{\xi x} & A_{\xi\xi} \end{array}\right).$$

Moreover, D_ρ is symplectic, so that the bottom left part vanishes. Hence,

$$h_0 \circ \rho^{-1} = Q_F(q)(x,\xi) + Q_S(q)(p) + O(|p|^3 + |x|^3 + |\xi|^3),$$

for some quadratic forms Q_F and Q_S.

Since h_0 vanishes at order exactly 2 on Z, the quadratic forms Q_F and Q_S are positive definite.

Second step: It only remains to diagonalise Q_F with a symplectomorphism. In fact, this is possible without modifying Q_S. Indeed, let $\phi : (\mathbb{R}^r, 0) \mapsto Sp(2(n-r))$ be such that, for every q near zero, the matrix $\phi(q)$ realises a symplectic reduction of $Q_F(q)$, as in Proposition 4.2.4. With J the standard complex structure matrix on $\mathbb{R}^{2(n-r)}$ and $\langle \cdot, \cdot \rangle$ its standard Euclidian norm, we define, for every $1 \leq i \leq r$, the real function

$$f_i : (q, x, \xi) \mapsto \frac{1}{2}\langle (x, \xi), (\partial_{q_i}\phi(q) J \phi^t(q))(x, \xi)\rangle.$$

We then define $f : (\mathbb{R}^{2n-r}, 0) \to \mathbb{R}^r$ as the map with components f_i in the canonical basis. Then a straightforward computation shows that the map

$$\Phi : (q, p, x, \xi) \mapsto (q, p + f, \phi(q)(x, \xi))$$

is a symplectomorphism. As $f = O_{(x,\xi)\to 0}((x, \xi)^2)$, the 2-jet of $h_0 \circ \Phi$ at $(q, 0, 0, 0)$ is the same as the 2-jet of $h_0 \circ ((q, p, x, \xi) \mapsto (q, p, \phi(q)(x, \xi)))$, i.e.

$$Q_S(q)(p) + Q_F^{red}(q)(x, \xi),$$

where the ground state of $T_N(Q_F^{red})$ is the standard Gaussian in x and ξ. This concludes the proof. □

Remark 5.4.3. We corrected the map

$$(q, p, x, \xi) \mapsto (q, p, \phi_q(x, \xi))$$

into a symplectomorphism by only changing the second coordinate. This does not depend on the fact that ϕ_q acts linearly but relies only on $\phi_q(0, 0) = (0, 0)$.

5.4.2 Approximate first eigenfunction

Let us quantize, using Proposition 2.3.6, the symplectic map of Proposition 5.4.2, and conjugate with pseudodifferential operators:

Definition 5.4.4. For any choice $\mathfrak{S}_N$ of quantization of the map ρ of Proposition 5.4.2, the classical symbol $g_{\mathfrak{S}} \sim \sum N^{-i} g_i$ on a neighbourhood U of 0 in $\mathbb{R}^{2n}$ is defined as follows: for any sequence $(v_N)_{N\geq 1}$ with microsupport in a compact set of U, the following holds:

$$\mathcal{B}_N^{-1}\mathfrak{S}_N^{-1}T_N(h)\mathfrak{S}_N\mathcal{B}_N v_N = Op_W^{N^{-1}}(g_{\mathfrak{S}})v_N + O(N^{-\infty}).$$

In what follows, we choose an arbitrary quantum map $\mathfrak{S}_N$, and we write g instead of $g_{\mathfrak{S}}$. The reason we use Weyl quantization in this subsection is because we will rely heavily on squeezing operators. The computations are much easier to follow for this formalism.

The principal and subprincipal symbols of g are explicit at the points of interest: $g_0 = h_0 \circ \rho$ by construction, and g_1 is prescibed on $\{g_0 = 0\}$ by the Melin estimates for Weyl and Toeplitz quantizations:

Proposition 5.4.5. *For any q close to 0, one has*

$$g_1(q,0,0,0) = \frac{1}{4}\operatorname{tr}(\operatorname{Hess}(h_0)(\rho(q,0,0,0))) + h_1(\rho(q,0,0,0)).$$

Proof. From the expression of $h_0 \circ \rho$ in Proposition 5.4.2, one has

$$\mu(\rho(q,0,0,0)) = \frac{1}{4}\operatorname{tr}(Q_F^{red}(q)) + \frac{1}{4}\operatorname{tr}(\operatorname{Hess}(h_0)(\rho(q,0,0,0))) + h_1(\rho(q,0,0,0)).$$

If $h_0(x) = 0$ and $\delta > 0$ is small enough, the value $\mu(x)$ has the following variational characterisation:

$$\mu(x) = \lim_{N\to+\infty}\left(N\inf\left(\int_M h|u|^2, u \in H_N(X), \int_{B(x,N^{-\frac{1}{2}+\delta})}|u|^2 = 1\right)\right)$$

This variational problem can be read via the quantum map. If

$$\int_{B(x,2N^{-\frac{1}{2}+\delta})}|u|^2 = O(N^{-\infty}),$$

then $\mathcal{B}_N^{-1}\mathfrak{S}_N^{-1}u$ microlocalises at speed $N^{-\frac{1}{2}+\delta}$ on $\rho^{-1}(x)$, and moreover,

$$\int_M h|u|^2 = \left\langle \mathcal{B}_N^{-1}\mathfrak{S}_N^{-1}u, Op_W^{N^{-1}}(g_0 + N^{-1}g_1)\mathcal{B}_N^{-1}\mathfrak{S}_N^{-1}u\right\rangle + O(N^{-2})\|u\|_2.$$

Now, if $x = \rho(q,0,0,0)$, the usual Melin estimate yields

$$\lim_{N\to+\infty}\left(N\inf\left(\left\langle vOp_W^{N^{-1}}(g_0)v\right\rangle, \mathfrak{S}_N\mathcal{B}_N v \text{ as above}\right)\right) = \frac{1}{4}\operatorname{tr}(Q_F^{red}(q)),$$

hence, $g_1(\rho(q,0,0,0))$ contains all the defect between $\mu(\rho(q,0,0,0))$ and this estimate. □

Remark 5.4.6. In general, the subprincipal symbol is not unique after application of a quantum map. Indeed, if a is any smooth real-valued function on M then $\exp(iT_N(a))$ is a unitary operator, and composing $\mathfrak{S}_N$ with this operator changes the subprincipal term.

Proposition 5.4.5 shows that on the points where the principal symbol vanishes, the subprincipal symbol is in fact rigid through any such transformations.

Let us find a candidate for an approximate first eigenfunction:

Proposition 5.4.7. *Suppose that the function $q \mapsto \mu \circ \rho(q,0,0,0)$ reaches a non-degenerate minimum at 0. Let ϕ be the positive quadratic form such that $q \mapsto e^{-\phi(q)}$ is the ground state of the operator*

$$Q_S(0)(-i\nabla) + \frac{1}{2}\sum_{i,j=1}^{r} q_i q_j \frac{\partial^2}{\partial q_i \partial q_j}(\mu\circ\rho)(0,0,0,0),$$

with eigenvalue μ_2.

Then there exists a sequence of polynomials $(b_i)_{i\geq 1}$, and a sequence of real numbers $(\mu_i)_{i\geq 1}$, with

$$\mu_0 = \mu\circ\rho(0,0,0,0)$$
$$\mu_1 = 0$$

and μ_2 as previously, such that, for every k,

$$f_N^k : (q,x) \mapsto N^{\frac{n}{2}-\frac{r}{4}} e^{-N\frac{x^2}{2}-\sqrt{N}\phi(q)} \left(1 + \sum_{i=1}^{k} N^{-\frac{i}{4}} b_i(N^{\frac{1}{4}}q, N^{\frac{1}{2}}x)\right)$$

is an approximate eigenvector to $Op_W^{N^{-1}}(g)$, with eigenvalue

$$\lambda_N^k = N^{-1} \sum_{i=0}^{k} N^{-\frac{i}{4}} \mu_i,$$

in the sense that, for every K there exists k such that

$$\|Op_W^{N^{-1}}(g) f_N^k - \lambda_N^k f_N^k\|_{L^2} = O(N^{-K}).$$

This proposition provides an almost eigenfunction which we will show to be associated to the lowest eigenvalue (see Proposition 5.4.9). It is the main argument in the proof of Theorem 5.2; the concentration speed of this eigenfunction on zero, which is $N^{-\frac{1}{4}}$, is the concentration speed of the lowest eigenvector of $T_N(h)$ on the miniwell P_0, because of Proposition 5.4.10.

Proof. The proof proceeds by a squeezing of $Op_W^{N^{-1}}(g)$ by a factor $N^{\frac{1}{4}}$ along the q variable.

Let

$$\tilde{g}_N = g(N^{-\frac{1}{4}}q, N^{-\frac{3}{4}}p, N^{-\frac{1}{2}}x, N^{-\frac{1}{2}}\xi).$$

Then $Op_W^{N^{-1}}(g_N)$ is conjugated with $Op_W^1(\tilde{g}_N)$ through the unitary change of variables $u \mapsto N^{\frac{n}{2}-\frac{r}{4}} u(N^{-\frac{1}{4}}q, N^{-\frac{1}{2}}x)$.

Grouping terms in a Taylor expansion of $\tilde{g}_N$ yields

$$\tilde{g}_N = N^{-1} \sum_{i=0}^{K} N^{-\frac{i}{4}} a_i(q,p,x,\xi) + O(N^{-\frac{K+5}{4}}),$$

with first terms

$$\begin{aligned}
a_0 =& g_1(0,0,0,0) + Q_F^{red}(0)(x,\xi) \\
a_1 =& q \cdot \nabla_q \Big(g_1(\cdot,0,0,0) + Q_F^{red}(\cdot)(x,\xi)\Big)(0) \\
a_2 =& Q_S(p) + \frac{1}{2}\operatorname{Hess}_q\Big(g_1(\cdot,0,0,0) + Q_F^{red}(\cdot)(x,\xi)\Big)(0)(q) \\
&+ R_3(x,\xi) + L(x,\xi).
\end{aligned}$$

Here R_3 is a homogeneous polynomial of degree 3 and L is a linear form.

We further write $A_i = Op_W^1(a_i)$.

Recall from Proposition 5.4.5 that $g_1(q,0,0,0) + \frac{1}{4}\operatorname{tr}(Q_F^{red}(q)) = \mu \circ \rho(q,0,0,0)$, and let ϕ be the positive quadratic form such that $e^{-\phi}$ is the ground state (up to a positive factor) of

$$Op_W^1\left(Q_S(p) + \frac{1}{2}\operatorname{Hess}(\mu \circ \rho)(0)(q)\right).$$

Finally, let

$$u_0 : (q,x) \mapsto e^{-\frac{|x|^2}{2}-\phi(q)}.$$

We will provide a sequence of almost eigenfunctions of $Op^1_W(\tilde{g}_N)$, of the form

$$u_0(q,x)\left(1+\sum_{i=1}^{+\infty} N^{-\frac{i}{4}} b_i(q,x)\right),$$

with approximate eigenvalue

$$N^{-1}\sum_{i=0}^{+\infty} N^{-\frac{i}{4}}\mu_i.$$

We proceed by perturbation of the dominant order A_0, which does not depend on q. Our starting point is

$$u_0 = e^{-\frac{|x|^2}{2}-\phi(q)},\ \mu_0 = \min \mathrm{Sp}(A_0)$$

$$u_1 = 0,\ \mu_1 = 0.$$

Indeed, one has $A_0 u_0 = \mu_0 u_0$, and $A_1 u_0 = 0$ since

$$\nabla\left(g_1(\cdot,0,0,0) + \frac{1}{4}\operatorname{tr}(Q_F^{red}(\cdot))\right)(0) = 0,$$

so that u_0 is an approximate eigenvector for $Op^1_W(\tilde{g})$.

Let us proceed by induction. Let $k \geq 1$ and suppose that we have already built $u_0,\dots,u_k$ and $\mu_1,\dots,\mu_k$ which solve the eigenvalue equation at order k; suppose further that there exists $C_{k+1}\in\mathbb{R}$ such that, for every $q\in\mathbb{R}^r$,

$$\int_{\mathbb{R}^{n-r}} \overline{u_0}(x,q)\left(\sum_{i=1}^{k+1}[A_i u_{k+1-i}](q,x) - \sum_{i=1}^{k}\mu_i u_{k+1-i}(q,x)\right)\mathrm{d}x = C_{k+1}|u_0(x,q)|^2.$$

Then one can solve the equation

$$(A_0-\mu_0)u_{k+1} + \dots + (A_{k+1}-\mu_{k+1})u_0 = 0,$$

up to a multiple of $e^{-\frac{|x|^2}{2}}$ in u_{k+1}. Indeed, if we write

$$u_{k+1} = v(q)e^{-\frac{|x|^2}{2}} + w(x,q),$$

where for every $q\in\mathbb{R}^r$ one has $w(q,\cdot)\perp e^{-\frac{|\cdot|^2}{2}}$, the equation reduces to

$$(A_0-\mu_0)w + \dots + (A_{k+1}-\mu_{k+1})u_0 = 0.$$

Freezing q and taking the scalar product with $x\mapsto e^{-\frac{|x|^2}{2}}$ yields

$$\lambda_{k+1} = C_{k+1}.$$

Then, with q still frozen one has $(A_0-\mu_0)w = r.h.s$ where the r.h.s is orthogonal to the ground state of A_0, which allow us to solve for w.

If the r.h.s is u_0 times a polynomial in (q,x), then the same holds for w (in particular, for all i one has $A_i w\in L^2$ so that it makes sense to proceed with the induction).

It remains to choose v so that u_{k+1} satisfies the orthogonality constraint above, in order to be able to build the next terms.

Since $\mu_1 = 0$ and $A_1 u_0 = 0$, the terms $i = 1$ vanish so that the first integral in which u_{k+1} appears is not the next one but the one after it:

$$\int_{\mathbb{R}^{n-r}} \overline{u_0}(x,q)\left(\sum_{i=2}^{k+3}[A_i u_{k+3-i}](q,x) - \sum_{i=2}^{k+2}\mu_i u_{k+3-i}(q,x)\right)\mathrm{d}x.$$

Hence, one wants to solve

$$\int_{\mathbb{R}^{n-r}} e^{-\frac{|x|^2}{2}}[(A_2-\mu_2)ve^{-\frac{|\cdot|^2}{2}}](q,x) = F(q) + C_{k+3}e^{-\phi(q)},$$

with

$$F(q) = -\int_{\mathbb{R}^{n-r}} e^{-\frac{|x|^2}{2}}\left([(A_2-\mu_2)w](x,q) + \sum_{i=3}^{k+3}[A_i u_{k+3-i}](x,q) - \sum_{i=3}^{k+2}\mu_i u_{k+3-i}(x,q)\right)\mathrm{d}x.$$

The symbol a_2 decomposes into a quadratic symbol in (q,p), and an odd polynomial in (x,ξ). The latter does not contribute to the integral in the left-hand-side, and the former commutes with multiplication by $e^{-\frac{|x|^2}{2}}$, so that

$$\int_{\mathbb{R}^{n-r}} e^{-\frac{|x|^2}{2}}[(A_2-\mu_2)ve^{-\frac{|\cdot|^2}{2}}](q,x) = C_{n-r}\left(Q_S(iD) + \frac{1}{2}\operatorname{Hess}(g_1(\cdot,0,0,0) + \frac{1}{4}\operatorname{tr}(Q_F^{red}(\cdot)))(q) - \mu_2\right)v.$$

The equation on v is then

$$\left(Q_S(iD) + \frac{1}{2}\operatorname{Hess}(\mu\circ\rho)(0)(q) - \mu_2\right)v = C_{n-r}^{-1}\left(F(q) + C_{k+3}e^{-\phi(q)}\right).$$

With

$$C_{k+1} = -\langle e^{-\phi(q)}, F(q)\rangle,$$

one has

$$F - C_{k+1}e^{-\phi} \perp e^{-\phi},$$

so that one can solve for v.

Again, if $u_0,\dots,u_k$ and w are u_0 times a polynomial function in (x,q), then F is $e^{-\phi}$ times a polynomial function, so that the same is true for v. This concludes the construction by induction.

The estimation of the error terms stems directly from the fact that the terms u_k are polynomials time a function with Gaussian decay. Hence, this formal construction yields approximate eigenfunctions. □

Before we show that the almost eigenfunction computed in Proposition 5.4.7 corresponds indeed to the lowest eigenvalue, let us use the quantum maps $\mathfrak{S}_N$ to obtain upper and lower bounds for $T_N(h)$, which will be useful in Section 5.6.

Proposition 5.4.8. *Let A_N^{reg} be the following operator on $L^2(\mathbb{R}^r)$:*

$$A_N^{reg} = Op_W^{N^{-1}}\big(|p|^2 + N^{-1}|q|^2\big)$$

Under the conditions of Proposition 5.4.7, there exists $a_0 > 0$, and two constants $0 < c < C$ such that, for any N, for any $a < a_0$, for any normalised $u \in L^2(X)$ supported in $B(P_0, a) \times \mathbb{S}^1$ such that $S_N u = u + O(N^{-\infty})$, letting $v = \mathcal{B}_N^{-1}\mathfrak{S}_N^{-1}u$, one has:

$$\begin{aligned} c\langle v, A_N^{reg} v\rangle + c\bigg(\langle v, Op_W^{N^{-1}}(|x|^2 + |\xi|^2)v\rangle - N^{-1}\frac{n-r}{2}\bigg) \\ - C\langle v, Op_W^{N^{-1}}(|N^{-\frac{1}{2}}, p, x, \xi|^3)v\rangle - O(N^{-\infty}) \\ \leq \langle u, hu\rangle - N^{-1}\mu(P_0). \end{aligned}$$

In addition, the following bound holds:

$$\begin{aligned} c\langle v, A_N^{reg} v\rangle + \langle v, Op_W^{N^{-1}}(Q_F^{red}(0)(x,\xi))v\rangle - C\langle v, Op_W^{N^{-1}}(|N^{-\frac{1}{2}}, p, x, \xi|^3)v\rangle \\ - aC\bigg(\langle v, Op_W^{N^{-1}}(|x|^2 + |\xi|^2)v\rangle - N^{-1}\frac{n-r}{2}\bigg) - O(N^{-\infty}) \\ \leq \langle u, hu\rangle - N^{-1}\mu(P_0) + \frac{N^{-1}}{4}\operatorname{tr}(Q_F^{red}(0)) \\ \leq C\langle v, A_N^{reg} v\rangle + \langle v, Op_W^{N^{-1}}(Q_F^{red}(0)(x,\xi))v\rangle + C\langle v, Op_W^{N^{-1}}(|N^{-\frac{1}{2}}, p, x, \xi|^3)v\rangle \\ + aC\bigg(\langle v, Op_W^{N^{-1}}(|x|^2 + |\xi|^2)v\rangle - N^{-1}\frac{n-r}{2}\bigg) + O(N^{-\infty}). \end{aligned}$$

Here, the notation $O(|N^{-\frac{1}{2}}, p, x, \xi|^3)$ stands for $O(|p, x, \xi|^3 + N^{-\frac{3}{2}})$.

Proof. Let us prove the first lower bound. As

$$g_0(q, p, x, \xi) = Q_F^{red}(q)(x,\xi) + Q_S(q)(p) + O(|p, x, \xi|^3),$$

one has first, by a lower bound on $Op_W^{N^{-1}}(Q_F^{red}(q)(x,\xi))$,

$$\begin{aligned} &\langle v, Op_W^{N^{-1}}(g_0)v\rangle \\ &\quad \geq c\langle v, Op_W^{N^{-1}}(|p|^2)v\rangle + \frac{N^{-1}}{4}\langle v, \operatorname{tr}(Q_F^{red}(q)), v\rangle + \langle v, Op_W^{N^{-1}}(|x, p, \xi, N^{-\frac{1}{2}}|^3)v\rangle. \end{aligned}$$

Let us make this bound more precise. Since all eigenvalues of $Q_F^{red}(q)$ are positive, there exists $c > 0$ such that, for q small enough, one has

$$Op_W^{N^{-1}}(Q_F^{red}(q)(x,\xi)) - \frac{N^{-1}}{4}\langle v, \operatorname{tr}(Q_F^{red}(q))v\rangle \geq cOp_W^{N^{-1}}(|x|^2 + |\xi|^2) - \frac{N^{-1}}{2}c(n-r).$$

Hence

$$\begin{aligned} \langle v, Op_W^{N^{-1}}(g_0)v\rangle \geq c\langle v, Op_W^{N^{-1}}(|p|^2)v\rangle + \frac{N^{-1}}{4}\langle v, \operatorname{tr}(Q_F^{red}(q)), v\rangle \\ + c\langle v, Op_W^{N^{-1}}(|x|^2 + |\xi|^2)\rangle - c\frac{N^{-1}}{2}(n-r) - C\langle v, Op_W^{N^{-1}}(|x, \xi, N^{-\frac{1}{2}}|^3)v\rangle. \end{aligned}$$

Recall from Proposition 5.4.5 that $g_1 = \mu(\rho(q, 0, 0, 0)) - \frac{1}{4}\operatorname{tr}(Q_F^{red}(q)) + O(|x, p, \xi|)$.

Hence,

$$\langle v, Op_W^{N^{-1}}(g)v\rangle \geq c\langle v, Op_W^{N^{-1}}(|p|^2)v\rangle + \frac{N^{-1}}{2}\langle v, \mu(\rho(q,0,0,0)), v\rangle$$
$$+ c\langle v, Op_W^{N^{-1}}(|x|^2+|\xi|^2) - c\frac{N^{-1}}{2}(n-r) - C\langle v, Op_W^{N^{-1}}(|N^{-\frac{1}{2}}, p, x, \xi|^3)v\rangle.$$

As $\mu(\rho(q,0,0,0)) \geq \mu(P_0) + c|q|^2$, this yields the lower bound.
We now turn to the second estimate. This first requires a bound on

$$\langle v, Op_W^{N^{-1}}(Q_F(q)(x,\xi) - Q_F^{red}(0)(x,\xi))v\rangle.$$

Since $Q_F(q) - Q_F(0) = O(|q|)$ and since the expression above vanishes only when v is a standard Gaussian in x, one has

$$\left|\langle v, Op_W^{N^{-1}}(Q_F(q)(x,\xi) - Q_F^{red}(0)(x,\xi))v\rangle\right|$$
$$\leq Ca\left(\langle v, Op_W^{N^{-1}}(|x|^2+|\xi|^2)v\rangle - N^{-1}\frac{n-r}{2}\right).$$

Moreover, since $Q_S(q) > 0$ and using the miniwell condition, one has

$$c\langle v, A_N^{reg}v\rangle - C\langle v, Op_W^{N^{-1}}(|N^{-\frac{1}{2}}, p, x, \xi|^3)v\rangle$$
$$\leq \langle v, Op_W^{N^{-1}}(Q_S(q)(p) + N^{-1}g_1(q,p,x,\xi))\rangle$$
$$\leq C\langle v, A_N^{reg}v\rangle + C\langle v, Op_W^{N^{-1}}(|N^{-\frac{1}{2}}, p, x, \xi|^3)v\rangle.$$

This concludes the proof. □

5.4.3 Spectral gap

It only remains to show that the sequence of almost eigenfunctions given by Proposition 5.4.7 corresponds to the first eigenvalue of $T_N(h)$.

Proposition 5.4.9. *Let h be a classical symbol with $h_0 \geq 0$, such that the minimum of the Melin value μ is only reached at one point, which is a miniwell for h.*

Let (μ_i) be the real sequence constructed in the previous proposition, and let $\lambda_{\min}$ be the first eigenvalue of $T_N(h)$.

Then

$$\lambda_{\min} \sim N^{-1}\sum_{i=0}^{\infty} N^{-\frac{i}{4}}\mu_i.$$

Moreover, there exists $c > 0$ such that, for every N, one has

$$\operatorname{dist}(\lambda_{\min}, Sp(T_N(h)) \setminus \{\lambda_{\min}\}) \geq cN^{-\frac{3}{2}}.$$

Proof. Let us show that any function orthogonal to the one proposed in Proposition 5.4.7 has an energy which is larger by at least $cN^{-\frac{3}{2}}$.

Let (v_N) be a sequence of unit vectors in $L^2(\mathbb{R}^n)$. If

$$\langle v_N, Op_W^1(\tilde{g}_N)v_N\rangle \leq N^{-1}\mu_0 + CN^{-\frac{3}{2}}$$

for some C, then $v_N = e^{-\frac{|x|^2}{2}} w_N(q) + O(N^{-\frac{1}{2}})$, with $\|w_N\|_{L^2} = 1 + O(N^{-\frac{1}{2}})$.

If $C - \mu_2$ is strictly smaller than the spectral gap of the quadratic operator

$$Op^1_W\left(Q_S(0)(p) + \frac{1}{2}\operatorname{Hess}\mu \circ \rho(\cdot,0,0,0)(q)\right),$$

then $\langle w_N, e^{-\phi(q)}\rangle \geq a$ for some $a > 0$ independent of N, which concludes the proof. □

To conclude the proof of Theorem 5.2, let us show that quantum maps preserve concentration speed:

Lemma 5.4.10. *Let $\sigma : (M,x) \mapsto (M',y)$ a local symplectomorphism between two quantizable Kähler manifolds.*

Let $0 < \delta < \frac{1}{2}$ and let $(u_N)_{N\in\mathbb{N}}$ a sequence of unit elements in the Hardy spaces $H^0(M, L^{\otimes N})$ such that

$$\int_{\left\{\operatorname{dist}(\pi(y),x)\leq N^{-\frac{1}{2}+\delta}\right\}} |u_N(y)|^2 = O(N^{-\infty}).$$

Then

$$\int_{\left\{\operatorname{dist}(\pi'(y),\sigma(x))\leq N^{-\frac{1}{2}+\delta}\right\}} |\mathfrak{S}u_N(y)|^2 = O(N^{-\infty}).$$

Proof. Let us observe that the condition on (u_N) is equivalent to the following: for every $k \in \mathbb{N}$, there exists $C_k > 0$ such that

$$\langle u_N, T_N(\operatorname{dist}(\cdot,x)^{2k})u_N\rangle \leq C_k N^{-k(1+2\delta)}.$$

Let us prove, by induction on k, the estimate

$$\langle \mathfrak{S}_N u_N, T_N(\operatorname{dist}(\cdot,\sigma(x))^{2k})\mathfrak{S}_N u_N\rangle \leq \tilde{C}_k N^{-k(1+2\delta)}.$$

The case $k = 0$ is clearly true since $\mathfrak{S}_N$ is an almost unitary operator when acting on functions localised near x.

Let us now apply Proposition 2.3.6 with $a = \operatorname{dist}(\cdot,x)^{2k}$, stopping the expansion at order k.

For $j \leq k$, the error terms are controlled:

$$\left|N^{-j}L_j(a\circ\sigma)\right| \leq N^{-j}C_{j,k}\operatorname{dist}(\cdot,\sigma(x))^{2(k-j)}$$

Hence, by induction,

$$\begin{aligned}&\langle \mathfrak{S}_N u_N, T_N(\operatorname{dist}(\cdot,\sigma(x))^{2k})\mathfrak{S}_N u_N\rangle \\ &\qquad \leq \sum_{j=0}^{2k} C_{j,k}\langle u_N, T_N(\operatorname{dist}(\cdot,x)^{2(k-j)})u_N\rangle + O(N^{-k}) = O(N^{k(-1+2\delta)}).\end{aligned}$$

This ends the proof. □

5.5 Normal form for crossing points

In this section we treat a case in which the zero set of the symbol is not a submanifold. The local hypotheses on the symbol are as follows:

Definition 5.5.1. Let h be a classical symbol on M with $h_0 \geq 0$ and let $P_0 \in M$. The zero set of h_0 is said to have a *simple crossing* at P_0 if there is an open set U containing P_0 such that:

- $\{h_0 = 0\} \cap U = Z_1 \cup Z_2$, where Z_1 and Z_2 are two pieces of smooth isotropic submanifolds of M.
- $Z_1 \cap Z_2 = \{P_0\}$ and $T_{P_0}Z_1 \cap T_{P_0}Z_2 = \{0\}$.
- $T_{P_0}Z_1 \oplus T_{P_0}Z_2$ is isotropic.
- For $i = 1, 2$, on all of $Z_i \setminus \{P_0\}$, h_0 vanishes at order exactly 2 on Z_i.
- There is $c > 0$ such that, for all $x \in Z_1 \cup Z_2$, one has:

$$\mu(x) - \mu(P_0) \geq c\,\mathrm{dist}(P_0, x).$$

The last condition may seem very strong. However, μ is typically only Lipschitz-continuous at the intersection. A typical example is

$$h(q_1, q_2, p_1, p_2) = p_1^2 + p_2^2 + q_1^2 q_2^2,$$

where along $\{q_1, 0, 0, 0\}$ one has $\mu(q_1) = |q_1| + 1$. We exclude on purpose situations like $\mu(q_1) = 1 + |q_1| - q_1 + q_1^2$, which grows like $|q_1|$ for $q_1 < 0$ but grows like q_1^2 for $q_1 > 0$.

Under the hypotheses of Definition 5.5.1, we first give a symplectic normal form of h_0 near P_0, then a description of the first eigenvector and eigenvalue of $T_N(h)$ in the following Subsections.

The symplectic normal form for h_0 does not depend on the hypothesis on μ. However, the pseudodifferential operator P associated to the first Taylor coefficients in this normal form, which we study in Subsection 5.5.2, has compact resolvent under this assumption, and its inverse is well-behaved (in particular, it preserves fast decay, see Proposition 5.5.11).

5.5.1 Symplectic normal form

Let $Q \geq 0$ be a semidefinite positive quadratic form on $(\mathbb{R}^{2n}, \omega)$, and (e_i, f_i) a symplectic basis of $\mathbb{R}^{2n}$ which diagonalises Q:

$$Q\left(\sum_{i=1}^{n} q_i e_i + p_i f_i\right) = \sum_{i=r+1}^{r'} p_i^2 + \sum_{i=r'+1}^{n} \lambda_i (q_i^2 + p_i^2),$$

$$\forall i, \lambda_i \neq 0.$$

Let M denote the matrix of Q in the canonical basis. Then

$$\{\pm i\lambda_{r'+1}, \ldots, \pm i\lambda_n\} = \sigma(JM) \setminus \{0\}.$$

More precisely, if E_λ denotes the (complex) eigenspace of JM with eigenvalue λ, then

$$E_{i\lambda_j} \oplus E_{-i\lambda_j} = \mathrm{span}_{\mathbb{C}}((e_k, f_k), k > r', \lambda_k = \lambda_j).$$

Moreover, Jordan blocks never occur for nonzero eigenvalues. Hence,

Proposition 5.5.2. *If $Q : \mathbb{R}^m \mapsto S^+_{2n}(\mathbb{R})$ is a smooth parameter-dependent semi-positive quadratic form on $(\mathbb{R}^{2n}, \omega)$, of constant symplectic rank $2d$, then the span of the non-zero symplectic eigenspaces of Q (whose dimension is $2d$), depends smoothly on Q.*

Using the result above, one can build a symplectic normal form for functions with crossing points. Let us first "flatten" the geometry near a crossing point.

Proposition 5.5.3. *Let $h_0 \in C^\infty(M, \mathbb{R}^+)$ be such that the zero set of h_0 has a simple crossing at $P_0 \in M$ and let*

$$r_1 = \dim(Z_1)$$
$$r_2 = \dim(Z_2).$$

Then there exists a symplectomorphism σ from a neighbourhood of P_0 to a neighbourhood V of 0 in $\mathbb{R}^{2n} = \mathbb{R}^{2r_1} \times \mathbb{R}^{2r_2} \times \mathbb{R}^{2(n-r_1-r_2)}$ such that

1. $\sigma(\{h_0 = 0\}) = V \cap [\mathbb{R}^{r_1} \times \{0,0,0,0,0\} \cup \{0,0\} \times \mathbb{R}^{r_1} \times \{0,0,0\}]$.
2. $\ker \mathrm{Hess}(h_0 \circ \sigma^{-1})(0) = \mathbb{R}^{r_1} \times \{0\} \times \mathbb{R}^{r_2} \times \{0,0,0\}$.
3. $\forall q_1 \in \mathbb{R}^{r_1}$, $\ker \mathrm{Hess}(h_0 \circ \sigma^{-1})(q_1, 0,0,0,0,0) = \mathbb{R}^{r_1} \times \{0,0,0,0,0\}$.
4. $\forall q_2 \in \mathbb{R}^{r_2}$, $\ker \mathrm{Hess}(h_0 \circ \sigma^{-1})(0,0,q_2,0,0,0) = \{0,0\} \times \mathbb{R}^{r_2} \times \{0,0,0\}$.
5. $\forall z \in \sigma(\{h_0 = 0\})$, *the space* $\{0,0,0,0\} \times \mathbb{R}^{2(n-r_1-r_2)}$ *is symplectically invariant under* $\mathrm{Hess}(h_0 \circ \sigma^{-1})(z)$.

Proof. From Proposition 5.5.2 applied to the Hessian matrix of h_0, the span $\mathcal{F}$ of the "fast modes", corresponding to the $n-r_1-r_2$ largest symplectic eigenvalues, vary smoothly along Z_1 and along Z_2. Its symplectic ortogonal $\mathcal{S}$ then varies smoothly along Z_1 and along Z_2.

First part: let us prove that there exists a piece of symplectic manifold Σ, tangent to $\mathcal{S}$ along Z_1 and along Z_2 near 0. The existence of such a symplectic manifold, as we will see, depends on an integrability condition at P_0 which is satisfied in our setting.

We first push, using any smooth diffeomorphism, a neighbourhood of P_0 in M to $\mathbb{R}^{2n}$, in a way which sends Z_1 to $\mathbb{R}^{r_1} \times \{0,0,0,0,0\}$ and Z_2 to $\{0,0\} \times \mathbb{R}^{r_2} \times \{0,0,0\}$ (we will also call these subspaces Z_1 and Z_2 to avoid cumbersome notation). Since $T_0 Z_1 \cup T_0 Z_2 \subset \mathcal{S}(0)$, after another (linear) change of variables, one has

$$\mathcal{S}(0) = \mathbb{R}^{2(r_1+r_2)} \times \{0,0\}.$$

In this chart, we will construct Σ as the graph of a smooth function

$$f : \mathbb{R}^{2(r_1+r_2)} \to \mathbb{R}^{2(n-r_1-r_2)},$$

such that $\mathrm{d}f$ is prescribed along Z_1 and along Z_2, where $f = 0$. Since symplectic manifolds are stable by deformation, and f is a smooth deformation of the zero

function, this graph will be symplectic in a neighbourhood of 0 (for the pulled-back symplectic structure).

Since $TZ_1 \subset \mathcal{S}$, the prescription of $\mathrm{d}f$ on Z_1 is of the form

$$[\mathrm{d}f(q_1, 0, 0, 0, 0, 0)](\mathrm{d}q_1, \mathrm{d}p_1, \mathrm{d}q_2, \mathrm{d}p_2) = L_1(q_1)(\mathrm{d}p_1, \mathrm{d}q_2, \mathrm{d}p_2).$$

Here L_1 is a linear form with smooth dependence in q_1.

Let

$$f_1 : (q_1, p_1, q_2, p_2) \mapsto L_1(q_1)(p_1, q_2, p_2).$$

Then the graph of f_1 is tangent to $\mathcal{S}$ at 0. Since $\mathrm{d}f(0) = 0$, one has $L_1(0) = 0$ so that f_1 vanishes on Z_2.

Let us prove that $\mathrm{d}f_1 = 0$ on this set, that is, for all $(q_1, q_2) \in \mathbb{R}^{r_1+r_2}$,

$$\partial_{q_1} L_1(0)(0, q_2, 0) = 0.$$

The form L_1 is determined by the Hessian of h_0 along Z_1. In a Taylor expansion of h_0 near 0, there are no terms in (q_1, q_2) of degree less than 4. Indeed, when restricted on $\mathbb{R}^{r_1} \times \{0\} \times \mathbb{R}^{r_2} \times \{0, 0, 0\}$, the function h_0 and its differential vanishes along $\mathbb{R}^{r_1} \times \{0\}$, hence one can write

$$h_0 = \sum_{j,k=1}^{r_2} q_{2,j} q_{2,k} g_{j,k}(q_1, q_2)$$

where $g_{j,k}$ is a smooth function: there are no terms of order less than 2 in q_2 in the Taylor expansion of h_0 near 0. Symmetrically, there are no terms of order less than 2 in q_1 in this expansion, so that there are no terms of total degree less than 4.

In particular, when h_0 is restricted on $\mathbb{R}^{r_1} \times \{0\} \times \mathbb{R}^{r_2} \times \{0, 0, 0\}$, its Hessian at $(q_1, 0)$ is $O(q_1^2)$. This means that the subspace $\{0, 0\} \times \mathbb{R}^{r_2} \times \{0, 0, 0\}$ is at distance $O(q_1^2)$ from its projection on $\mathcal{S}(q_1, 0, 0, 0, 0, 0)$, so that $\partial_{q_1} L_1(0)(0, q_2, 0) = 0$.

Symmetrically, we can construct a smooth function f_2, tangent to $\mathcal{S}$ on Z_2, such that f_2 and $\mathrm{d}f_2$ vanish on Z_1.

The function $f = f_1 + f_2$ then satisfies all requirements.

Second part. From Proposition 5.4.1, one can flatten the symplectic submanifold Σ: after a symplectic change of variables, one has $\Sigma = \mathbb{R}^{2r_1+2r_2} \times \{0, 0\}$. Inside Σ, one can use Proposition 5.4.1 again to flatten Z_1 into $\mathbb{R}^{r_1} \times \{0, 0, 0\}$. At this stage of the proof, we obtain a symplectomorphism which satisfies conditions 3, and 5 in Proposition 5.5.3.

It only remains to flatten Z_2 inside Σ. After a linear change of variables, condition 2 is satisfied, that is,

$$T_0 Z_2 = \{0, 0\} \times \mathbb{R}^{r_2} \times \{0, 0, 0\}.$$

Inside Σ, the manifold Z_2 is then the graph of a smooth function

$$\{g_1(q_2), g_2(q_2), q_2, g_3(q_2)\}$$

with $g_i(0) = 0, \mathrm{d}g_i(0) = 0$ for all $i = 1, 2, 3$. Since Z_2 is isotropic, one has, for all $1 \leq i, k \leq r_2$,

$$\frac{\partial g_{3,i}}{\partial q_{2,k}} = \sum_{j=1}^{r_1} \left(\frac{\partial g_{1,j}}{\partial q_{2,k}} \frac{\partial g_{2,j}}{\partial q_{2,i}} - \frac{\partial g_{1,j}}{\partial q_{2,i}} \frac{\partial g_{2,j}}{\partial q_{2,k}} \right).$$

In particular, the left-hand side in the equation above is an antisymmetric matrix.

Let us first remove the two first components, that is, apply a symplectomorphism of the form

$$(q_1, p_1, q_2, p_2) \mapsto (q_1 - g_1(q_2), p_1 - g_2(q_2), q_2, p_2 + G(q_1, p_1, q_2))$$

where it remains to find G such that this is indeed a symplectomorphism and such that $G(q_1, 0, 0) = 0$ (so that Z_1 is left invariant).

The requirement of a symplectomorphism is equivalent to the following system of differential equations on G, for all $1 \leq i, k \leq r_2$, $1 \leq j \leq r_1$:

$$\begin{aligned}
\frac{\partial G_i}{\partial q_{1,k}} &= \frac{\partial g_{2,k}}{\partial q_{2,i}} \\
\frac{\partial G_i}{\partial p_{1,k}} &= -\frac{\partial g_{1,k}}{\partial q_{2,i}} \\
\frac{\partial G_i}{\partial q_{2,k}} - \frac{\partial G_k}{\partial q_{2,i}} &= \sum_{j=1}^{r_1} \left(\frac{\partial g_{1,j}}{\partial q_{2,k}} \frac{\partial g_{2,j}}{\partial q_{2,i}} - \frac{\partial g_{1,j}}{\partial q_{2,i}} \frac{\partial g_{2,j}}{\partial q_{2,k}} \right) = \frac{\partial g_{3,i}}{\partial q_{2,k}} = \frac{1}{2} \left(\frac{\partial g_{3,i}}{\partial q_{2,k}} - \frac{\partial g_{3,k}}{\partial q_{2,i}} \right).
\end{aligned}$$

All equations are satisfied by letting:

$$G_i : (q_1, p_1, q_2) \mapsto \sum_{j=1}^{r_1} \left(q_{1,j} \frac{\partial g_{2,j}}{\partial q_{2,i}}(q_2) - p_{1,j} \frac{\partial g_{1,j}}{\partial q_{2,i}}(q_2) \right) + \frac{1}{2} g_{3,i}(q_2).$$

Notice that one has indeed $G(q_1, 0, 0) = 0$.

After this change of variables, Z_2 is a Lagrangean subspace of $\{0, 0\} \times \mathbb{R}^{2r_2}$. By Proposition 5.4.1, it can be flattened into $\{0, 0\} \times \mathbb{R}^{r_2} \times \{0\}$, which concludes the proof. □

Once that the zero set near a crossing point is conveniently flattened, one can perform a reduction of h_0 near this crossing point.

Proposition 5.5.4. *Let h satisfy the simple crossing conditions of Definition 5.5.1, and let*

$$\begin{aligned}
r_1 &= \dim(Z_1) \\
r_2 &= \dim(Z_2).
\end{aligned}$$

Then there is an open set $V \subset U$, containing P_0, and a symplectic map

$$\sigma : V \mapsto \mathbb{R}^{2r_1} \times \mathbb{R}^{2r_2} \times \mathbb{R}^{2(n-r_1-r_2)}$$

such that h_0, read in the map σ, takes the form

$$\begin{aligned}
h_0 \circ \sigma^{-1}(q_1, p_1, q_2, p_2, x, \xi) \\
&= Q_F^{red}(q_1, q_2)(x, \xi) + Q_S(q_1, q_2)(p_1, p_2) \\
&\quad + \sum_{i,j=1}^{r_1} \sum_{k,l=1}^{r_2} \alpha_{ijkl} q_{1,i} q_{1,j} q_{2,k} q_{2,l} \\
&\quad + O(\|x, \xi, p_1, p_2\|^3) + O(\|p_1, p_2, x, \xi\| \|q_1, q_2\|^3) + O(\|q_1\|^2 \|q_2\|^2 (\|q_1\| + \|q_2\|)).
\end{aligned}$$

Here, for every (q_1, q_2) close to 0, the ground state of $T_N((x, \xi) \mapsto Q_F^{red}(q_1, q_2)(x, \xi))$ is the standard Gaussian. Q_S is a quadratic form in (p_1, p_2) with smooth dependence in (q_1, q_2). Moreover, for every $(q_1, q_2) \in (\mathbb{R}^{r_1} \setminus \{0\}) \times (\mathbb{R}^{r_2} \setminus \{0\})$ small enough, the matrices given by $\left[\sum_{i,j} \alpha_{ijkl} q_{1,i} q_{1,j}\right]_{k,l}$ and $\left[\sum_{k,l} \alpha_{ijkl} q_{2,k} q_{2,l}\right]_{i,j}$ are positive.

Proof. The first step is Proposition 5.5.3. A symplectic change of variables σ_1 sends Z_1 to $\mathbb{R}^{r_1} \times \{0,0,0,0,0\}$, Z_2 to $\{0,0\} \times \mathbb{R}^{r_2} \times \{0,0,0\}$, and such that, at each point of $Z_1 \cup Z_2$, the fast modes of $\mathrm{Hess}(h_0)$ span $\{0,0,0,0\} \times \mathbb{R}^{2(n-r_1-r_2)}$. At this stage, one has

$$h \circ \sigma_1 = Q_F(q_1,q_2)(x,\xi) + Q_S(q_1,q_2)(p_1,p_2) + O(\|p_1,p_2,x,\xi\|^3) + O(\|q_1,q_2\|^4).$$

As in Proposition 5.4.2, the next step is to reduce Q_F into a quadratic form which is unitarily equivalent to a symplectically diagonal form, with smooth dependence on (q_1,q_2). This change of variables can again be corrected into a symplectic change of variables up to a negligible modification of (p_1,p_2). Thus there exists a symplectic change of variables σ_2 such that

$$h \circ \sigma_1 = Q_F^{red}(q_1,q_2)(x,\xi) + Q_S(q_1,q_2)(p_1,p_2) + O(\|p_1,p_2,x,\xi\|^3) + O(\|q_1\|^2\|q_2\|^2),$$

with Q_F^{red} as requested.

Continuing the expansion yields

$$\begin{aligned} h \circ \sigma_1 = {} & Q_F^{red}(q_1,q_2)(x,\xi) + Q_S(q_1,q_2)(p_1,p_2) + \sum_{i,j,k,l} \alpha_{ijkl} q_{1,i} q_{1,j} q_{2,k} q_{2,l} \\ & + O(\|p_1,p_2,x,\xi\|\|q_1,q_2\|^3) + O(\|p_1,p_2,x,\xi\|^3) + O(\|q_1\|^2\|q_2\|^2\|q_1,q_2\|). \end{aligned}$$

The positivity conditions on the tensor α are then directly given by the fact that h_0 vanishes at order 2 on $Z_1 \setminus \{P_0\}$ and $Z_2 \setminus \{P_0\}$. □

One can easily adapt Definition 5.5.1 to the case of a crossing along a submanifold.

Definition 5.5.5 (Crossing along a submanifold)**.** Let h be a classical symbol on M with $h_0 \geq 0$. The zero set of h_0 is said to *cross along a submanifold* near P_0 if there is an open set U containing P_0 such that:

- $\{h_0 = 0\} \cap U = Z_1 \cup Z_2$, where Z_1 and Z_2 are two pieces of smooth isotropic submanifolds of M.
- $Z_1 \cap Z_2 = Z_3$ is a piece of smooth submanifold containing P_0. For each $x \in Z_3$, one has $T_x Z_3 = T_x Z_1 \cap T_x Z_2$.
- For each $x \in Z_3$, the space $T_x Z_1 + T_x Z_2$ is isotropic.
- For $i = 1,2$, on all of $Z_i \setminus Z_3$, h_0 vanishes at order exactly 2 on Z_i.
- There is $c > 0$ such that, for all $x \in Z_1 \cup Z_2$, one has:

$$\mu(x) - \mu(P_0) \geq c\,\mathrm{dist}(Z_3, x).$$

With this definition one can find a normal form as previously:

Proposition 5.5.6. *Let h satisfy the conditions of Definition 5.5.5, and let*

$$\begin{aligned} r_1 &= \dim(Z_1) - \dim(Z_3) \\ r_2 &= \dim(Z_2) - \dim(Z_3) \\ r_3 &= \dim(Z_3). \end{aligned}$$

Then there is an open set $V \subset U$, containing P_0, and a symplectic map

$$\sigma : V \mapsto \mathbb{R}^{2r_1} \times \mathbb{R}^{2r_2} \times \mathbb{R}^{2r_3} \times \mathbb{R}^{2(n-r_1-r_2-r_3)}$$

such that

$$\begin{aligned} h_0 \circ \sigma^{-1}&(q_1, p_1, q_2, p_2, q_3, p_3, x, \xi) \\ &= Q_F^{red}(q_1, q_2, q_3)(x_i^2 + \xi_i^2) + Q_S(q_1, q_2, q_3)(p_1, p_2, p_3) \\ &\qquad + \sum_{i,j=1}^{r_1} \sum_{k,l=1}^{r_2} \alpha_{ijkl}(q_3) q_{1,i} q_{1,j} q_{2,k} q_{2,l} \\ &+ O(\|x, \xi, p_1, p_2\|^3) + O(\|p_1, p_2, x, \xi\| \|q_1, q_2\|^3) + O(\|q_1\|^2 \|q_2\|^2 \cdot \|(q_1, q_2)\|). \end{aligned}$$

Here Q_F^{red} and Q_S are positive quadratic forms with smooth dependence on (q_1, q_2, q_3), and Q_F^{red} has the standard Gaussian as a quantum ground state Moreover, for every $q_3 \in \mathbb{R}^{r_3}$ small enough, for every $(q_1, q_2) \in (\mathbb{R}^{r_1} \setminus \{0\}) \times (\mathbb{R}^{r_2} \setminus \{0\})$ small enough, the matrices given by $\left[\sum_{i,j} \alpha_{ijkl} q_{1,i} q_{1,j}\right]_{k,l}$ and $\left[\sum_{k,l} \alpha_{ijkl} q_{2,k} q_{2,l}\right]_{i,j}$ are positive.

Proof. As in Proposition 5.5.3 the first step is to transform, with a symplectomorphism, Z_1 into $\{q_1, 0, 0, 0, q_3, 0, 0, 0, (q_1, q_3) \in \mathbb{R}^{r_1+r_3}\}$ and, similarly, Z_2 into $\{0, 0, q_2, 0, q_3, 0, 0, 0, (q_2, q_3) \in \mathbb{R}^{r_2+r_3}\}$ while respecting the decomposition between fast and slow modes along Z_1 and Z_2. The piece of symplectic submanifold Σ containing $Z_1 \cup Z_2$ and tangent to the slow modes can be built as previously (in particular, the integrability condition is satisfied along Z_3). Within this manifold, one can flatten the isotropic submanifold Z_1 into $\{q_1, 0, 0, 0, q_3, 0, 0, 0, (q_1, q_3) \in \mathbb{R}^{r_1+r_3}\}$. Without loss of generality, Z_2 is then of the form

$$\{\mathfrak{q}_1(q_2, q_3), \mathfrak{p}_1(q_2, q_3), q_2, \mathfrak{p}_2(q_2, q_3), q_3, \mathfrak{p}_3(q_2, q_3)\}.$$

One can flatten this manifold in three steps. For the first step, consider the following map, with smooth dependence on q_2:

$$\sigma_{q_2} : (q_3, p_3) \mapsto (q_3, p_3 - \mathfrak{p}_3(q_2, q_3)).$$

Since Z_2 is isotropic, for all i, j one has $\frac{\partial \mathfrak{p}_{3,j}}{\partial q_{3,k}} = -\frac{\partial \mathfrak{p}_{3,k}}{\partial q_{3,j}}$, so that σ_{q_2} is a symplectic change of variables, which maps 0 to 0. Then, as in the proof of Proposition 5.4.2, there exists f such that

$$(q_2, p_2, q_3, p_3) \mapsto (q_2, p_2 + f(q_2, q_3, p_3), \sigma_{q_2}(q_3, p_3))$$

is a symplectic change of variables.

After this first step, Z_2 is of the form

$$\{(\mathfrak{q}_1(q_2, q_3), \mathfrak{p}_1(q_2, q_3), q_2, \mathfrak{p}_2'(q_2, q_3), q_3, 0), (q_2, q_3) \in (\mathbb{R}^{r_2+r_3}, 0)\}.$$

Now, for fixed q_3, following Proposition 5.5.3 there is a change of variables which flattens Z_2. The second step is to apply this change of variables (and add a correction to p_3 in order to have a symplectic change of variables in all coordinates). After this step, Z_2 is of the form

$$\{(0, 0, q_2, 0, q_3, \mathfrak{p}_3{}'(q_2, q_3)), (q_2, q_3) \in (\mathbb{R}^{r_2+r_3}, 0)\}.$$

Since Z_2 is isotropic, $\mathfrak{p}_3{}'$ does not, in fact, depend on q_2, and one can simply flatten this isotropic manifold into

$$\{(0,0,q_2,0,q_3,0),(q_2,q_3)\in(\mathbb{R}^{r_2+r_3},0)\}.$$

One can then repeat the proof of Proposition 5.5.4. This yields the desired result. □

Remark 5.5.7 (More general degenerate crossings)**.** Simple crossings (and crossings along submanifolds) are not stable by Cartesian products, which leads to a slightly more general situation (see Remark 5.5.8).

On the other hand, one could try to deal with symbols whose zero set form a *stratified manifold*, which are defined recursively: a stratified manifold is a union of smooth manifolds with clean intersections, such that the union of all intersections is itself a stratified manifold. The boundary of a hypercube is an instance of a stratified manifold.

In this respect, a model case for a stratified situation of degree three is

$$p_1^2+p_2^2+p_3^2+q_1^2q_2^2q_3^2,$$

with zero set $\{p_1=0,p_2=0,p_3=0,q_i=0\}$ for every $i=1,2,3$.

For this operator, the ground state is rapidly decreasing at infinity [HN92] but this is not due to subprincipal effects. Indeed, in this setting, μ is constant along the three axes. If we add a generic transverse quadratic operator $Q_q(x,\xi)$, the subprincipal effect will dominate and has no reason to select the point $\{q=0\}$, as opposed to the simple crossing case where an open set of symbols sharing the same minimal set have minimal Melin value at the crossing point.

5.5.2 Study of the model operator

As Proposition 5.5.4 suggests, the following operators play an important role in the study of the crossing case:

$$P=Q(iD)+\sum_{i,j=1}^{r_1}\sum_{k,l=1}^{r_2}\alpha_{ijkl}q_{1,i}q_{1,j}q_{2,k}q_{2,l}+\sum_{i=1}^{r_1}L_{1,i}q_{1,i}+\sum_{i=1}^{r_2}L_{2,i}q_{2,i},$$

acting on $L^2(\mathbb{R}^{r_1+r_2})$, where D is the differentiation operator and $Q>0$ is a quadratic form. The linear form L will appear as an effect of the subprincipal symbol, as we will see later.

Let Q_1 and Q_2 denote the restrictions of the quadratic form Q on $\mathbb{R}^{r_1}\times\{0\}$ and $\{0\}\times\mathbb{R}^{r_2}$, respectively. Throughout this subsection we impose the following conditions on P:

- For every (q_1,q_2), one has

$$\sum_{i,j=1}^{r_1}\sum_{i,j=1}^{r_2}\alpha_{ijkl}q_{1,i}q_{1,j}q_{2,k}q_{2,l}\geq 0.$$

- For every $q_1\neq 0$, one has

$$Q_2(iD)+\sum_{ijkl}q_{1,i}q_{1,j}q_{2,k}q_{2,l}>\sum_{i=1}^{r_1}L_{1,i}q_{1,i},$$

- For every $q_2 \neq 0$, one has

$$Q_1(iD) + \sum_{ijkl} q_{1,i} q_{1,j} q_{2,k} q_{2,l} > \sum_{i=1}^{r_1} L_{2,i} q_{2,i},$$

Remark 5.5.8. These conditions are weaker than what Definition 5.5.1 calls for. There does not need to be a simple crossing in this case as the following example illustrates:

$$P = -\Delta + q_{1,1}^2 q_{2,1}^2 + q_{1,2}^2 q_{2,2}^2.$$

There, the zero set of the symbol is a union of four isotropic surfaces in $\mathbb{R}^8$, i.e. $\{p = 0, q_{1,i} = 0, q_{2,j} = 0\}$ for all $(i,j) \in \{1,2\}^2$.

Proposition 5.5.9. *Under the previous conditions, there exists $c > 0$ such that*

$$P \geq c(Q(iD) + |q|).$$

Proof. Let Q_2 be the restriction of the quadratic form Q to $\{0\} \times \mathbb{R}^{r_2}$. One has $Q \geq Q_2$, hence $Q(iD) \geq Q_2(iD)$. By hypothesis,

$$Q_2(iD) + \sum_{ijkl} q_{1,i} q_{1,j} q_{2,k} q_{2,l} > \sum_{i=1}^{r_1} L_{1,i} q_{1,i},$$

and the infimum of the spectrum of the left hand side is 1-homogeneous in q_1, so that

$$Q_2(iD) + \sum_{ijkl} q_{1,i} q_{1,j} q_{2,k} q_{2,l} \geq (1-c) \sum_{i=1}^{r_1} L_{1,i} q_{1,i} + 2c|q_1|$$

for some $c > 0$. In particular,

$$P \geq cQ(iD) + 2c|q_1|.$$

The same reasoning applies to Q_2, hence

$$2P \geq 2cQ(iD) + 2c|q_1| + 2c|q_2|,$$

which allows us to conclude. □

One deduces immediately:

Proposition 5.5.10. *The operator P has compact resolvent. Its first eigenvalue is positive.*

We are now able to use Agmon estimates. In the particular case where Q is diagonal, the following result is contained in the Helffer-Nourrigat theory [HN92], see also the related results in [MT06].

Proposition 5.5.11. *Let λ_0 be the first eigenvalue of P. There exists $c > 0$ such that, if $u \in L^2(\mathbb{R}^{r_1+r_2})$, and $(C_\beta)_{\beta \in \mathbb{N}^{r_1+r_2}}$ are such that $|\partial^\beta u(q)| \leq C_\beta e^{-c|q|^{3/2}}$ for all $q \in \mathbb{R}^{r_1+r_2}, \beta \in \mathbb{N}^{r_1+r_2}$, then for any $f \in L^2(\mathbb{R}^{r_1+r_2})$ such that $(P - \lambda_0)f = u$, there exists $(C'_\beta)_{\beta \in \mathbb{N}^{r_1+r_2}}$ such that $|\partial^\beta f(q)| \leq C' e^{-c|q|^{3/2}}$ for every $q \in \mathbb{R}^{r_1+r_2}, \beta \in \mathbb{N}^{r_1+r_2}$.*

Proof. With $\phi(q) = c|q|^{3/2}$, one has $Q(\vec{\nabla}\phi) \leq c'|q|$. Hence $P - \lambda_0 - Q(\vec{\nabla}\phi)$ is positive far from zero, and one can use Agmon estimates as developed in [Agm14]. □

We will also need the following two facts. Proposition 5.5.12 is an essential ingredient of Subsection 5.5.3 and Proposition 5.5.13 is necessary to compare the Weyl asymptotics with the regular case.

Proposition 5.5.12. *The first eigenvalue λ_0 of P is simple.*

Proof. This follows from an argument which is standard in the case $Q = Id$. Let $u_0 \in L^2(\mathbb{R}^{r_1+r_2})$ be such that $Pu_0 = \lambda_0 u_0$. Then u_0 is a minimizer of the Courant-Hilbert problem

$$\min_{\|u\|_{L^2}=1,\, u\in H^1} \int Q(\vec{\nabla} u) + V|u|^2.$$

The set $\{u_0 = 0\}$ has zero Lebesgue measure from a standard Unique Continuation argument. The function $|u_0|$ is then also a minimizer of this quantity, since $\vec{\nabla}|u_0| = \pm\vec{\nabla} u_0$ whenever $u_0 \neq 0$.

Then $|u_0|$ itself belongs to the eigenspace of P with value λ_0, which is (a priori) a finite-dimensional space of real analytic (complex-valued) functions. Hence, $|u_0|$ is real analytic so that $u_0 = |u_0|e^{i\theta_0}$, with θ_0 real analytic.

Now

$$\int \overline{u_0} P u_0 = \int |u_0|(P - Q(\nabla\theta_0))|u_0| = \lambda_0 - \int Q(\nabla\theta_0)|u_0|^2.$$

As $\{|u_0| = 0\}$ has zero Lebesgue measure and $Q > 0$, the function θ_0 is constant, so that u_0 and $|u_0|$ are colinear.

To conclude, if u_0 and u_1 are two orthogonal eigenfunctions of P with eigenvalue λ_0, then $|u_0|$ and $|u_1|$ are orthogonal with each other, and both have $\mathbb{R}^{r_1+r_2}$ as support, so that either $u_0 = 0$ or $u_1 = 0$. □

Proposition 5.5.13. *Suppose P satisfies the following two supplementary conditions:*

- $r_1 = r_2$.
- *For every $(q_1, q_2) \in (\mathbb{R}^{r_1} \setminus \{0\}) \times (\mathbb{R}^{r_2} \setminus \{0\})$, the matrices given by $\left[\sum_{i,j} \alpha_{ijkl} q_{1,i} q_{1,j}\right]_{k,l}$ and $\left[\sum_{k,l} \alpha_{ijkl} q_{2,k} q_{2,l}\right]_{i,j}$ are positive.*

Let $\Lambda > 0$ and let N_Λ denote the number of eigenvalues of P less than Λ (with multiplicity).

Then there are $C > c > 0$ such that, as $\Lambda \to +\infty$, one has

$$c\Lambda^{\frac{3}{2}r_1}\log(\Lambda) \leq N_\Lambda \leq C\Lambda^{\frac{3}{2}r_1}\log(\Lambda).$$

Proof. Under the second supplementary condition, the quartic part of the potential is greater than $c|q_1|^2|q_2|^2$ for some $c > 0$. Hence, for some $C > 0$ one has $N_\lambda \geq \tilde{N}_\lambda$, where $\tilde{N}_\Lambda$ counts the eigenvalues less than Λ of

$$-\Delta + |q_1|^2|q_2|^2 + |q_1| + |q_2|.$$

On the other hand one clearly has $P \leq C(-\Delta + |q_1|^2|q_2|^2 + |q_1| + |q_2|)$ for some $C > 0$.

Thus, the problem boils down to Weyl asymptotics for the elliptic operator

$$-\Delta + |q_1|^2|q_2|^2 + |q_1| + |q_2|.$$

It suffices to control the volume of the sub-levels of its symbol:

$$\{(q_1, q_2, p_1, p_2) \in \mathbb{R}^{4r_1},\ |p_1|^2 + |p_2|^2 + |q_1|^2|q_2|^2 + |q_1| + |q_2| \leq \Lambda\}.$$

We first study

$$A_\Lambda = \{(q_1, q_2) \in \mathbb{R}^{r_1},\ |q_1|^2|q_2|^2 + |q_1| + |q_2| \leq \Lambda\}.$$

Then, decomposing A_Λ into $A_\Lambda \cap B(0, \Lambda^{\frac{r_1}{2}})$ and its complement set yields

$$\begin{aligned}
Vol(A_\Lambda) &\leq C\Lambda^{\frac{r_1}{2}} + 2\int_{|q_1|\geq\Lambda^{1/4}} Vol\{q_2, |q_1|^2|q_2|^2 + |q_1| + |q_2| \leq \Lambda\}. \\
&\leq C\Lambda^{\frac{r_1}{2}} + 2C\int_{|q_1|\geq\Lambda^{1/4}} \left(\frac{\sqrt{\Lambda - |q_1| + |q_1|^{-1}}}{|q_1|}\right)^{r_1} \\
&\leq C\Lambda^{\frac{r_1}{2}} + 2C\Lambda^{\frac{r_1}{2}} \int_{\Lambda^{-\frac{3}{4}}}^{2} \frac{1}{x}\mathrm{d}x \\
&\leq C\Lambda^{\frac{r_1}{2}} \log(\Lambda).
\end{aligned}$$

On the other hand,

$$\begin{aligned}
Vol(A_\Lambda) &\geq 2\int_{|q_1|\geq\Lambda^{1/4}} Vol\{q_2, |q_1|^2|q_2|^2 + |q_1| + |q_2| \leq \Lambda\}. \\
&\geq 2c\int_{|q_1|\geq\Lambda^{1/4}} \left(\frac{\sqrt{\Lambda - |q_1| + |q_1|^{-1}}}{|q_1|}\right)^{r_1} \\
&\geq 2c\Lambda^{\frac{r_1}{2}} \int_{\Lambda^{-\frac{3}{4}}}^{2} \frac{1}{x}\mathrm{d}x \\
&\geq c\Lambda^{\frac{r_1}{2}} \log(\Lambda).
\end{aligned}$$

Integrating yields

$$\begin{aligned}
Vol(\{(q_1, q_2, p_1, p_2) \in \mathbb{R}^{4r_1},\ |p_1|^2 + |p_2|^2 + |q_1|^2|q_2|^2 + |q_1| + |q_2| \leq \Lambda\}) \\
\in [c\Lambda^{\frac{3}{2}r_1} \log(\Lambda), C\Lambda^{\frac{3}{2}r_1} \log(\Lambda)],
\end{aligned}$$

hence the claim. □

5.5.3 Approximate first eigenfunction

In this subsection we give an expansion for the first eigenfunction and eigenvalue in a crossing case, following the same strategy as Subsection 5.4.2. We quantize the symplectic map of Proposition 5.5.4 and we use the Bargmann transform to reformulate the problem in the pseudodifferential algebra, in which we squeeze the operator. This time, the squeezing is of order $N^{\frac{1}{6}}$ along (q_1, q_2), with a concentration speed of $N^{-\frac{1}{3}+\epsilon}$ along the zero set, instead of $N^{-\frac{1}{4}+\epsilon}$ as was seen in the regular case. We then apply a perturbative argument to obtain the full expansion of the first eigenvalue and eigenvector.

Definition 5.5.14. For any choice $\mathfrak{S}_N$ of quantization of the map σ of Proposition 5.5.4, the classical symbol $g_{\mathfrak{S}} \sim \sum N^{-i} g_i$ on a neighbourhood U of 0 in $\mathbb{R}^{2n}$ is

defined as follows: for any sequence $(u_N)_{N\geq 1}$ with microsupport in a compact set of U, the following holds:

$$\mathcal{B}_N^{-1}\mathfrak{S}_N^{-1}T_N(h)\mathfrak{S}_N\mathcal{B}_N u_N = Op_W^{N^{-1}}(g_{\mathfrak{S}})u_N + O(N^{-\infty}).$$

In what follows, we choose an arbitrary quantum map $\mathfrak{S}_N$, and we write g instead of $g_{\mathfrak{S}}$.

The subprincipal part g_1 is prescribed on $Z_1 \cup Z_2$ by the local Melin estimates.

Proposition 5.5.15. *Along $\sigma(Z_1)$, for q_1 close to zero, one has*

$$g_1(q_1,0,0,0,0,0) = \frac{1}{4}\operatorname{tr} Q_F^{red}(q_1,0) + \left(\frac{1}{4}\operatorname{tr}(\mathrm{Hess}(h_0)) + h_1\right)(q_1,0,0,0,0,0).$$

Along $\sigma(Z_2)$, for q_2 close to zero, one has

$$g_1(0,0,q_2,0,0,0)\frac{1}{4}\operatorname{tr} Q_F^{red}(q_2,0) + \left(\frac{1}{4}\operatorname{tr}(\mathrm{Hess}(h_0)) + h_1\right)(0,0,q_2,0,0,0).$$

The proof is exactly the same as for Proposition 5.4.5.

Let us define

$$P = Q_S(0)(-iD_{q_1},-iD_{q_2}) + \sum_{ijkl}\alpha_{ijkl}q_{1,i}q_{1,j}q_{2,k}q_{2,l} + \nabla\left(\frac{1}{4}\operatorname{tr} Q_F^{red} + \frac{1}{4}\operatorname{tr} Q_S\right)_{q_1=q_2=0}\cdot(q_1,q_2).$$

Then P satisfies the hypotheses of Subsection 5.5.2 and Proposition 5.5.13.

Proposition 5.5.16. *Under the conditions of Definition 5.5.1, there exists $c>0$, a sequence $(u_i)\in(L^2(\mathbb{R}^{r_1+r_2})[X_1,\dots,X_{n-r_1-r_2}])^{\mathbb{N}}$ of square-integrable functions of q with polynomial dependence on x, and a family of real values $(C_{i,\alpha,\beta})$ with*

$$\forall(i,\alpha,\beta,q)\in\mathbb{N}\times\mathbb{N}^{n-r_1-r_2}\times\mathbb{N}^{r_1+r_2}\times\mathbb{R}^{r_1+r-2},\ |\partial^\beta u_{i,\alpha}(q)|\leq C_{i,\alpha,\beta}e^{-c|q|^{3/2}},$$

and a sequence $(\mu_i)\in\mathbb{R}^{\mathbb{N}}$ with $\mu_0=\mu(P_0)$, $\mu_1=0$ and $\mu_2=\min\mathrm{Sp}(P)$, so that

$$N^{\frac{n}{2}-\frac{r_1+r_2}{6}}e^{-N|x|^2/2}\sum_{i=0}^{+\infty}N^{-\frac{i}{6}}u_i(N^{\frac{1}{2}}x,N^{\frac{1}{3}}q)$$

is an $O(N^{-\infty})$-eigenfunction of $Op_W^{N^{-1}}(g)$, with eigenvalue

$$N^{-1}\sum_{i=0}^{+\infty}N^{-\frac{i}{6}}\mu_i.$$

This proposition provides an almost eigenfunction which we will show to be associated to the lowest eigenvalue (see Proposition 5.5.18). It is the main argument in the proof of Theorem 5.3; the concentration speed of this eigenfunction on zero, which is $N^{-\frac{1}{3}}$, is the concentration speed of the lowest eigenvector of $T_N(h)$ on the miniwell, because of Proposition 5.4.10.

Proof. As announced, let us squeeze g by computing

$$\tilde{g} = g(N^{-\frac{1}{3}}q_1, N^{-\frac{2}{3}}p_1, N^{-\frac{1}{3}}q_2, N^{-\frac{2}{3}}p_2, N^{-\frac{1}{2}}x, N^{-\frac{1}{2}}\xi).$$

Grouping terms in the Taylor expansion yields, for any fixed $K \in \mathbb{N}$,

$$Op^1_W(\tilde{g}) = N^{-1}\sum_{i=0}^{K} N^{-\frac{i}{6}} Op^1_W(a_i) + O(N^{-\frac{K+7}{6}}).$$

The first terms are:

$$\begin{aligned} a_0 &= Q_F^{red}(0)(x,\xi) + \frac{1}{4}\operatorname{tr}(\operatorname{Hess}(h_0)(0)) + h_1(0) \\ a_1 &= 0 \\ a_2 &= \sigma(P). \end{aligned}$$

Here P is as above.

With $A_i = Op^1_W(a_i)$ let us solve by induction on k the following equation, where $(u_k)_{k\in\mathbb{N}}$ is as in the claim:

$$\Big(\sum N^{-\frac{i}{6}}(A_i - \mu_i)\Big)\Big(\sum N^{-\frac{i}{6}} u_i\Big) = 0.$$

If v_0 is the (unique) ground state of P then our starting point is

$$u_0 = e^{-\frac{|x|^2}{2}} v_0,\ \mu_0 = \min \operatorname{Sp} A_0,$$

$$u_1 = 0,\ \mu_1 = 0.$$

Indeed u_0 is an almost eigenvector for $Op^1_W(\tilde{g})$, with eigenvalue $N^{-1}\mu_0 + O(N^{-\frac{4}{3}})$.

Let us start an induction at $k = 1$. Suppose we have constructed the first k terms of the expansion $u_0, \ldots, u_k$ and $\mu_0, \ldots, \mu_k$, with $u_i \perp u_0$ for every i, and suppose that, for some $C_k \in \mathbb{R}$, one has, for every $q \in \mathbb{R}^{r_1+r_2}$,

$$\int_{\mathbb{R}^{n-r_1-r_2}} \overline{u_0}(q,x)\left(\sum_{i=2}^{k+1}[A_i u_{k+1-i}](q,x) - \sum_{i=2}^{k}[\mu_i u_{k+1-i}](q,x)\right)\mathrm{d}x = C_{k+1}|v_0(q)|^2.$$

Then the eigenvalue problem yields u_{k+1} up to a function of the form $v(q)e^{-\frac{|x|^2}{2}}$. Indeed, writing

$$u_{k+1}(q,x) = v(q)e^{-\frac{|x|^2}{2}} + w(q,x),$$

where for every q one has $w(q,\cdot) \perp e^{-\frac{|\cdot|^2}{2}}$, the eigenvalue equation is

$$(A_0 - \mu_0)u_{k+1} + (A_2 - \mu_2)u_{k-1} + \ldots + (A_{k+1} - \mu_{k+1})u_0 = 0$$

for u_{k+1} and μ_{k+1}. First $(A_0 - \mu_0)v(q)e^{-\frac{|x|^2}{2}} = 0$ so that

$$(A_0 - \mu_0)w + (A_2 - \mu_2)u_{k-1} + \ldots + (A_{k+1} - \mu_{k+1})u_0 = 0$$

By hypothesis, freezing the q variable and taking the scalar product of this equation with $x \mapsto e^{-\frac{|x|^2}{2}}$ yields $(C_{k+1} - \mu_{k+1})|v_0(q)|^2 = 0$. Let $\mu_{k+1} = C_{k+1}$. Then, for every $q \in \mathbb{R}^{r_1+r_2}$, the function

$$f_{k+1} : x \mapsto \sum_{i=2}^{k+1}[(A_i - \mu_i)u_{k+1-i}](q,x)$$

is orthogonal to $x \mapsto e^{-\frac{|x|^2}{2}}$. Hence $w = (A_0 - \mu_0)^{-1} f_{k+1}$ is well-defined and satisfies the eigenvalue equation.

Moreover, from Proposition 5.5.11, if by induction f_{k+1} is $e^{-\frac{|x|^2}{2}}$ times a polynomial in x, and if any derivative of any coefficient decays as fast as $e^{-c|q|^{3/2}}$, then the same is true for w.

At this point we need to check that, after the first step $k = 1$, the value μ_2 is indeed $\min \mathrm{Sp}(P)$.

If $k = 1$ then we are interested in the integral

$$\int_{\mathbb{R}^{n-r_1-r_2}} e^{-\frac{|x|^2}{2}} v_0(q)[A_2 u_0](q,x)\mathrm{d}x = \min \mathrm{Sp}(P)|v_0(q)|^2,$$

since v_0 is a ground state of P. This is indeed a constant function times $|v_0(q)|^2$, so that the induction hypothesis is satisfied at the first step, and $\mu_2 = \min \mathrm{Sp}(P)$ as required.

Now recall $u_k(q,x) = v(q)e^{-\frac{|x|^2}{2}} + w(q,x)$. The eigenvalue equation in itself does not state any condition on v; however, to compute the second next order, one needs to satisfy an orthogonality condition, i.e.

$$\int_{\mathbb{R}^{n-r_1-r_2}} \overline{u_0}(q,x)\left(\sum_{i=2}^{k+3}[A_i u_{k+3-i}](q,x) - \sum_{i=2}^{k+2}[\mu_i u_{k+3-i}](q,x)\right)\mathrm{d}x = C_{k+3}|v_0(q)|^2.$$

This is equivalent to

$$\int_{\mathbb{R}^{n-r_1-r_2}} e^{-\frac{|x|^2}{2}}\left[(A_2 - \mu_2)ve^{-\frac{|x|^2}{2}}\right](x,q)\mathrm{d}x = F(q) + C_{k+3}v_0(q).$$

Now a_2 has no terms in x or ξ so the equation reduces to

$$(A_2 - \mu_2)v = F(q) + C_{k+3}v_0(q).$$

Here,

$$F(q) = \int_{\mathbb{R}^{n-r_1-r_2}} e^{-\frac{|x|^2}{2}}\left(\sum_{i=3}^{k+3}[A_i u_{k+3-i}](q,x) - \sum_{i=3}^{k+2}[\mu_i u_{k+3-i}](q,x)\right)\mathrm{d}x,$$

so that $|\partial_\beta F(q)| \leq C_\beta e^{-c|q|^{3/2}}$.

To solve this equation, one takes $C_{k+3} = -\langle v_0, F\rangle$, then the r.h.s is orthogonal to v_0, so that one can solve for v (indeed, μ_2 is a simple eigenvalue of A_2 by Proposition 5.5.12).

Then, by Proposition 5.5.11, one has, for all $\beta \in \mathbb{N}^{r_1+r_2}$, for some C_β, that $|\partial^\beta v(q)| \leq C_\beta e^{-c|q|^{3/2}}$ for all $q \in \mathbb{R}^{r_1+r_2}$. This ends the induction.

The previous considerations were formal, but the decay properties of the functions u_k imply that $A_j u_k \in L^2$ for every j and k, which concludes the proof. □

Proposition 5.5.17. *Let A_N^{cross} be the following operator on $L^2(\mathbb{R}^{r_1+r_2})$:*

$$A_N^{cross} = Op_W^{N-1}\left(|p|^2 + |q_1|^2|q_2|^2\right)$$

Under the conditions of Definition 5.5.1 and Proposition 5.5.13, there exists $a_0 > 0$, and two constants $0 < c < C$ such that, for any N, for any $a < a_0$, for any normalized $u \in L^2(X)$ supported in $B(P_0, a) \times \mathbb{S}^1$ such that $S_N u = u + O(N^{-\infty})$, with $v = \mathcal{B}_N^{-1}\mathfrak{S}_N^{-1}u$, one has:

$$c\langle v, A_N^{cross} v\rangle + c\left(\langle v, Op_W^{N^{-1}}(|x|^2 + |\xi|^2)v\rangle - N^{-1}\frac{n-r}{2}\right) - C\langle v, Op_W^{N^{-1}}(|N^{-\frac{1}{2}}, x, \xi|^3)v\rangle - CN^{\frac{4}{3}} \leq \langle u, hu\rangle - N^{-1}\mu(P_0).$$

In addition, the following bound holds:

$$\begin{aligned} c\langle v, A_N^{cross} v\rangle + \langle v, Op_W^{N^{-1}}(Q_F(0)(x,\xi))v\rangle - C\langle v, Op_W^{N^{-1}}(|N^{-\frac{1}{2}}, x, \xi|^3)v\rangle \\ - aC\left(\langle v, Op_W^{N^{-1}}(|x|^2 + |\xi|^2)v\rangle - N^{-1}\frac{n-r}{2}\right) - CN^{-\frac{4}{3}} \\ \leq \langle u, hu\rangle - N^{-1}\mu(P_0) + \frac{N^{-1}}{4}\operatorname{tr} Q_F^{red}(0) \\ \leq C\langle v, A_N^{cross} v\rangle + \langle v, Op_W^{N^{-1}}(Q_F(0)(x,\xi))v\rangle + C\langle v, Op_W^{N^{-1}}(|N^{-\frac{1}{2}}, x, \xi|^3)v\rangle \\ + aC\left(\langle v, Op_W^{N^{-1}}(|x|^2 + |\xi|^2)v\rangle - N^{-1}\frac{n-r}{2}\right) + CN^{-\frac{4}{3}}. \end{aligned}$$

Proof. The proof follows the exact same lines as for Proposition 5.4.8: the difficulty lies in handling the (x, ξ) terms which take a similar form as above.

The supplementary $N^{-\frac{4}{3}}$ terms are due to positivity estimates for the Weyl quantization: from $c\sigma(A_N^{cross}) \leq g_0$ we can only deduce $cA_N^{cross} \leq Op_W^{N^{-1}}(g_0) + O(N^{-\frac{4}{3}})$. □

5.5.4 Spectral gap

As before, we show that the almost eigenfunction found previously corresponds to the first eigenvalue.

Proposition 5.5.18. *Let h be a classical symbol with $h_0 \geq 0$, and such that the minimum of the Melin value μ is only reached at one point, which is a simple crossing point of h.*

Let (μ_i) be the real sequence constructed in Proposition 5.5.16, and let λ_{min} be the first eigenvalue of $T_N(h)$.

Then

$$\lambda_{min} \sim N^{-1}\sum_{i=0}^{\infty} N^{-\frac{i}{6}}\mu_i.$$

Moreover, there exists $c > 0$ such that, for every N, one has

$$\operatorname{dist}(\lambda_{min}), Sp(T_N(h)) \setminus \{\lambda_{min}\}) \geq cN^{-\frac{4}{3}}.$$

Proof. Let us show that any function orthogonal to the one proposed in Proposition 5.5.16 has an energy which is larger by at least $cN^{-\frac{4}{3}}$.

Let $(v_N)_{N\geq 1}$ be a sequence of unit vectors in $L^2(\mathbb{R}^n)$. If

$$\langle v_N, Op_W^1(\tilde{g}_N)v_N\rangle \leq N^{-1}\mu_0 + CN^{-\frac{4}{3}}$$

for some C, then

$$v_N = e^{-\frac{|x|^2}{2}} w_N(q) + O(N^{-\frac{1}{3}})$$

with $\|w_N\|_{L^2} = 1 + O(N^{-\frac{1}{3}})$.

If $C - \mu_2$ is strictly smaller than the spectral gap of the operator P then, for some $a > 0$, one has $\langle w_N, v_0 \rangle \geq a$, which concludes the proof. □

5.6 Weyl asymptotics

Definition 5.6.1. We will say a miniwell has *dimension* r when the dimension of the zero set of h_0 around the miniwell is r. Similarly, we will say a crossing point has dimensions (r_1, r_2) when the dimensions of the two manifolds Z_1 and Z_2 around the point are r_1 and r_2, respectively.

Proof of Theorem 5.4.

1. Let u be a sequence of $O(N^{-\infty})$-quasimodes for $T_N(h)$ in the spectral window above, that localise at a miniwell P_0. Let $\mathfrak{S}_N$ be the quantum map quantizing the symplectic change of variables constructed in Proposition 5.4.2.

   Let $v_N = \mathcal{B}_N^{-1}\mathfrak{S}_N^{-1}u_N$. The first lower bound on Proposition 5.4.8 yields

   $$\langle v_N, Op_W^{N^{-1}}(|x|^2 + |\xi|^2)v_N \rangle - N^{-1}\frac{n-r}{2} \leq C\Lambda_N N^{-1}.$$

   From Proposition 5.3.1, for every $\delta > 0$, if $\epsilon > 0$ is small enough then u localises on $B(P_0, \delta)$. If δ is small enough then

   $$\delta C\left(\langle v_N, Op_W^{N^{-1}}(|x|^2 + |\xi|^2)v_N \rangle - N^{-1}\frac{n-r}{2}\right) \leq \frac{N^{-1}\Lambda_N}{2}.$$

   Let us prove an upper bound in the number of eigenvalues of $T_N(h)$. The second lower bound in Proposition 5.4.8 leads to

   $$c\langle v_N, A_N^{reg} v_N \rangle + \langle v_N, Op_W^{N^{-1}}(Q_F(0)(x,\xi))v_N \rangle - \frac{N^{-1}}{2}\sum_i \lambda_i(0)$$
   $$\leq \langle u_N, hu_N \rangle - N^{-1}\mu(P_0) + \frac{N^{-1}\Lambda_N}{2}.$$

   For ϵ smaller than the spectral gap of $Q_F(0)(x, D)$, the left-hand side has less than $C\Lambda_N^r$ eigenvalues smaller than $\frac{3N^{-1}\Lambda_N}{2}$, hence the claim.

   The lower bound proceeds along the same lines. The upper bound in Proposition 5.4.8 yields

   $$C\langle v_N, A_N^{reg} v_N \rangle + \langle v_N, Op_W^{N^{-1}}(Q_F(0)(x,\xi))v_N \rangle - \frac{N^{-1}}{2}\sum_i \lambda_i(0)$$
   $$\geq \langle u_N, hu_N \rangle - N^{-1}\mu(P_0) - \frac{N^{-1}\Lambda_N}{2}.$$

   The left-hand side has always more than $c\Lambda_N^r$ eigenvalues smaller than $\frac{N^{-1}\Lambda_N}{2}$, hence the claim.

2. The proof for crossing points is the same except for the actual count of eigenvalues of the reference operator, which stems from Proposition 5.5.13.

□

5.7 Application to spin systems

One of the main physical motivations for this study is the mathematical foundation of *quantum selection* in the context of spin systems. The search for materials with a non-conventional magnetic behaviour led experimental and theoretical physicists to consider frustrated antiferromagnetic spin systems, such as pyrochlore or the Kagome lattice. *Order by disorder* approaches in the large spin limit are commonly used in the physics literature, and the subprincipal effects presumably select a very small subset of configurations [DS98; SL97; Lec+97; RB93; Chu92].

Spin systems are particular cases of Toeplitz operators. In such systems the base manifold is a product of 2-spheres. Let $G = (V, E)$ be a finite graph and $M = (\mathbb{S}^2)^{\times|V|}$. M is formed as follows: at each vertex $i \in V$ of the graph we associate a unit vector $e_i = (x_i, y_i, z_i) \in \mathbb{S}^2$, called spin at site i. In particular, there are $3|V|$ coordinate functions $(x_i, y_i, z_i)_{i\in V}$ on M. The standard symplectic structure on $\mathbb{S}^2$ gives raise to a natural symplectic structure on M. For this symplectic structure, one has $\{x_i, y_j\} = \delta_{ij} z_i$, and two similar equations given by cyclic permutation. We introduce the *antiferromagnetic Heisenberg* symbol:

$$\begin{array}{rccc} h: & M & \mapsto & \mathbb{R} \\ & (e_i)_{i\in V} & \mapsto & \displaystyle\sum_{(i,j)\in E} x_i x_j + y_i y_j + z_i z_j. \end{array}$$

The minimum of this function corresponds to situations where the sum of the scalar products between neighbouring spins is the smallest. If G is bipartite, this minimum is reached in situations where neighbouring vectors are opposite. In *frustrated systems*, this is not possible. If for instance three vertices in the graph are linked with each other, then not all of them can be opposite to the other ones. This is the case of the Kagome lattice, and the Husimi tree, considered in [DS98] and depicted in Figure 5.

We will consider a class of graphs *made of triangles*. A finite connected graph $G = (V, E)$ is *made of triangles* when there is a partition $E = \bigsqcup_{i\in J} E_i$ where, for every i, E_i contains three edges that link together three vertices; in addition, we ask that the degree at any vertex does not exceed 4 (and is hence equal to either 2 or 4). We will call the E_i's the triangles of the graph.

Pieces of the Kagome lattice and the Husimi tree, in Figure 5, are made of triangles. In general, from a 3-regular finite graph $G = (V, E)$, one can build an associated graph made of triangles $\widetilde{G} = (\widetilde{V}, \widetilde{E})$ which is the *edge graph* of G: the set of vertices is $\widetilde{V} = E$ and two elements of $\widetilde{V}$ are adjacent in $\widetilde{G}$ when they are adjacent as edges of G (i.e. when they share a common vertex). In this case the triangles of $\widetilde{G}$ correspond to the vertices of G. The Kagome lattice is thus associated with the hexagonal lattice, and the infinite Husimi tree with the 3-regular tree.

The presence of the "frustration" by triangles leads to a large degeneracy of the classical minimal set. Indeed, h is minimal if, on each triangle V_i, the sum of the three spins at the vertices of the triangle is zero (so that these elements of $\mathbb{S}^2$ must form a great equilateral triangle). This is not always possible as the example to the right of Figure 5 shows. Those configurations exist on subsets of the Husimi tree and the Kagome lattice, and are highly degenerate: on the Husimi tree, once the spins on a triangle are chosen, there is an $\mathbb{S}^1$ degeneracy for each of its children; the set of minimal configurations is an isotropic torus whose dimension grows linearly

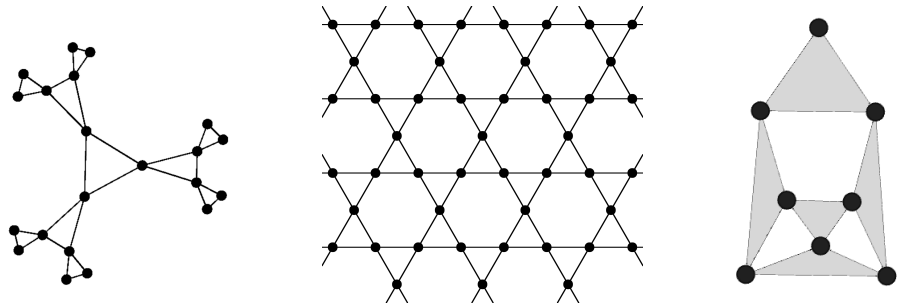

Figure 5: Main examples: a piece of the Husimi tree (left), and the Kagome lattice (middle). On the right, a graph made of 5 triangles on which the symbol cannot reach $-15/2$.

with the number of triangles. On the Kagome lattice, the set of these configurations does not form a smooth submanifold, hence the need for Theorems 5.1 and 5.3. It is currently unknown which minimal points of h achieve $\mu_{\min}$.

The main results of this section are:

Proposition 5.7.1. *For a loop of 6 triangles (the basic element of the Kagome lattice), the minimal set is not a smooth manifold.*

For a loop of 4 triangles, the minimal set is the direct product of $SO(3)$ and the union of three circles, two of each having transverse intersection at exactly one point. Planar configurations are local minima for μ.

5.7.1 Description of the zero set

If a graph is made of triangles $(V_i)_{i\in J}$, and if we denote by $\{u_i, v_i, w_i\}$ the three elements of $\mathbb{S}^2$ at the vertices of V_i, we write

$$h(e) = \sum_{i\in J} u_i \cdot v_i + u_i \cdot w_i + v_i \cdot w_i.$$

Moreover, for all $u, v, w \in \mathbb{S}^2$ one has

$$u \cdot v + u \cdot w + v \cdot w = \frac{1}{2}\|u + v + w\|^2 - \frac{3}{2}.$$

A way to minimize the symbol is thus to try to choose the vectors such that, for each triangle in the graph, the vectors at the vertices form a great equilateral triangle on $\mathbb{S}^2$ (this is equivalent to the requirement that their sum is the zero vector). As the example of the Husimi tree shows, this minimal set can be degenerate: once the vector at a vertex is chosen, there is an $\mathbb{S}^1$ degeneracy in the choice of the vectors at its children.

In the general case this solution is not always possible as can be seen on the right of Figure 5. Moreover, even if this solution is possible, the minimal set is not a submanifold, as we will see in an example.

A subset of interest of these minimal configurations consists in the case where all vectors are coplanar; this corresponds to colouring the graph with three colours. For some graphs made of triangles, there is no 3-colouring. Conversely, if the size of the graph grows the number of 3-colourings may grow exponentially fast.

A common conjecture in the physics literature is that, when applicable, the Melin value μ is always minimal only on planar configurations, except for a leaf degeneracy (see Proposition 5.7.4): in other terms, in the semiclassical limit, the quantum state presumably selects only planar configurations. It is unclear whether a study of the sub-subprincipal effects would discriminate further between planar configurations, but numerical evidence suggests that the quantum ground state is not distributed evenly on them at large spin.

Other selection effects tend to select the planar configurations: consider for instance the classical Gibbs measure, at a very small temperature. This measure concentrates on the points of the minimal set where the Hessian has a maximal number of zero eigenvalues (thermal selection); in this case it always corresponds to planar configurations, if any.

We conclude this subsection with a general statement about the isotropy of the classical minimal set.

Proposition 5.7.2. *Let $G = (V, E)$ be a graph made of triangles, and let $e \in (\mathbb{S}^2)^{|V|}$ be such that $h(e) = -\frac{|V|}{2}$, where h is the classical antiferromagnetic energy. Let $F \subset T_e M$ be the kernel of* $\mathrm{Hess}(h)(e)$. *Then F is isotropic.*

Proof. Let $(u, v, w) \in V^3$ be a triangle in the graph, and let $\pi : (\mathbb{S}^2)^{|V|} \to (\mathbb{S}^2)^3$ be the projection map which keeps only the spin coordinates corresponding to (u, v, w). We will prove that $\pi(F)$ is isotropic. Since $\mathrm{Hess}(h)(e) \geq 0$, one has $\pi(F) \subset \ker(\mathrm{Hess}(h_{u,v,w})(\pi(e)))$ where

$$h_{u,v,w}(e_u, e_v, e_w) = e_u \cdot e_v + e_u \cdot e_w + e_v \cdot e_w.$$

The problem then reduces to the case of one triangle. With the choice of coordinates on Figure 7, the Hessian of $h_{u,v,w}$ at a minimal point reads

$$(q_1 - q_2)^2 + (q_1 - q_3)^2 + (q_2 - q_3)^2 + 2(p_1 + p_2 + p_3)^2.$$

The kernel of this quadratic form is

$$\mathrm{span}((1, 1, 1, 0, 0, 0), (0, 0, 0, 1, -1, 0), (0, 0, 0, 1, 0, -1)),$$

which is isotropic. □

5.7.2 Irregularity of the zero set

One of the key examples of frustrated spin systems is the Kagome lattice. We restrict our study to the case of one loop of six triangles.

Proposition 5.7.3. *For a loop of six triangles (as in Figure 6), the minimal set is not smooth.*

Proof. The choice of the two vectors drawn on the left in Figure 6 induces a global $SO(3)$ rotation, and without loss of generality we will keep them fixed. Moreover, the position of the six inner vectors determines the position of the six outer vectors in a unique and smooth way, so we will forget about the latter.

The space of configurations of the pair (a, a') is a subset of a two-dimensional torus; indeed the choice for a' is made along a circle with center having its center

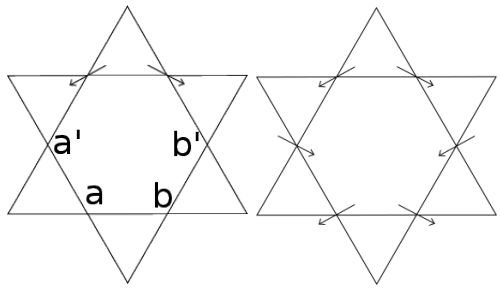

Figure 6: On the left, a graph with 6 triangles and two prescribed vectors. On the right, a particular (planar) configuration.

on the lower-left vector, and the choice for a is similarly made along a circle with center a'. The above applies to the pair (b, b'). Hence, the set of global configurations is a subset of a four-dimensional torus: the subset on which the angle between a and b is exactly $\frac{2\pi}{3}$. This cannot be an open set of the four-dimensional torus, as every coordinate and function involved is real analytic. Hence, if this set is a smooth manifold, its dimension does not exceed three.

On the other hand, consider the particular case of Figure 6 which represents a particular configuration. From this configuration, one stays in the minimal set by moving a' along a circle with center a; one can also move along a only, or along b only, or along b' only. The set of possible smooth moves from this configuration spans a set of dimension at least four, hence the contradiction.

□

5.7.3 Degeneracy for triangle leaves

The simplest example of a frustrated system is a triangle with three vertices, connected with each other. In this setting the degeneracy of the minimal set (which is exactly the set of configurations such that the sum of the three vectors is zero) corresponds to a global $SO(3)$ symmetry of the problem; in this case the function μ is constant.

Consider the left part of Figure 7. The three elements e_1, e_2, e_3 lie on the same large circle. We choose the coordinate q_i along this circle and the coordinate p_i orthogonal to it. In these coordinates, the half-Hessian of the classical symbol can be written as:

$$2(p_1 + p_2 + p_3)^2 + (q_1 - q_2)^2 + (q_1 - q_3)^2 + (q_2 - q_3)^2.$$

Since this quadratic form does not depend on the positions of e_1, e_2, e_3, the function μ is constant.

In the following Proposition we consider a slightly more general situation.

Proposition 5.7.4. *Consider a graph with a "triangle leaf" as in the inset on the right of Figure 2. In order to find a classical minimum for such a graph, once all vectors except for e_4 and e_5 are chosen, then e_4 and e_5 are fixed except for a rotation of centre e_3.*

The Melin value μ does not depend on this choice.

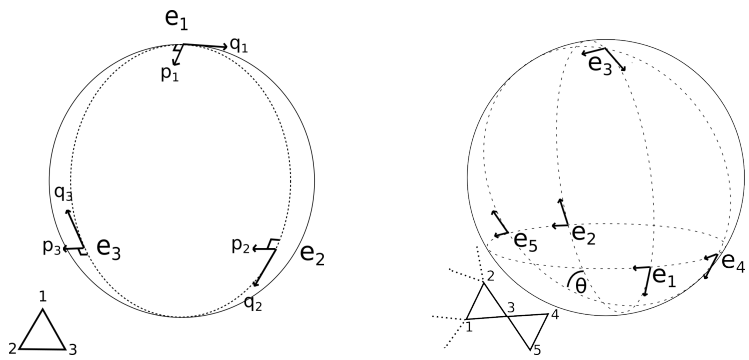

Figure 7: General minimal configuration for one triangle (left) and an triangle leaf (right) of spins, with choice of tangent coordinates. On the left, e_1, e_2, e_3 form a great equilateral triangle on the sphere; the associated great circle is drawn in dotted lines. From this configuration, the coordinate q_i corresponds to an infinitesimal displacement of e_i tangent to the circle, and p_i corresponds to an infinitesimal displacement orthogonal to the circle. On the right, e_1, e_2, e_3 and e_3, e_4, e_5 form two great equilateral triangles, and the angle between the associated great circles is θ. The coordinates are chosen in the same way as on the left.

Proof. Denoting $c = \cos(\theta)$ and $s = \sin(\theta)$, and using local coordinates as in the right part of Figure 7, the 2-jet of the Hamiltonian reads, in local coordinates:

$$\begin{aligned} Q(p_1, p_2, q_1, q_2, ...) + 2(p_4 + p_5)^2 + (q_4 - q_5)^2 + q_4^2 + q_5^2 + 4q_3^2 + 4p_3^2 \\ + 4p_3(p_1 + p_2) - 2q_3(q_1 + q_2) \\ + 4cp_3(p_4 + p_5) - 4sq_3(p_4 + p_5) \\ - 2cq_3(q_4 + q_5) - 2sp_3(q_4 + q_5). \end{aligned}$$

The trace of this quadratic form does not depend on θ. Hence, in order to prove that μ does not depend on θ it is sufficient to find symplectic coordinates in which this quadratic form does not depend on θ. A first symplectic change of variables leads to:

$$\begin{aligned} Q(p_1, p_2, q_1, q_2, ...) + 4p_4^2 + q_4^2 + 3q_5^2 + 4q_3^2 + 4p_3^2 \\ + 4p_3(p_1 + p_2) - 2q_3(q_1 + q_2) \\ + 4\sqrt{2}cp_3p_4 - 4\sqrt{2}sq_3p_4 - 2\sqrt{2}cq_3q_4 - 2\sqrt{2}sp_3q_4. \end{aligned}$$

Let us make the following change of variables:

$$\begin{aligned} p_4 &\mapsto cp_4 - s\frac{q_4}{2} \\ q_4 &\mapsto cq_4 + 2sp_4 \end{aligned}$$

This change of variables is symplectic, and preserves $4p_4^2 + q_4^2$. The quadratic form becomes:

$$\begin{aligned} Q(p_1, p_2, q_1, q_2...) + 4p_3(p_1 + p_2) - 2q_3(q_1 + q_2) \\ + 4p_4^2 + q_4^2 + 3q_5^2 + 4p_3^2 + 4q_3^2 + 8p_3p_4 - 4q_4q_3. \end{aligned}$$

Since this quadratic form does not depend on θ, the function μ does not depend on θ. □

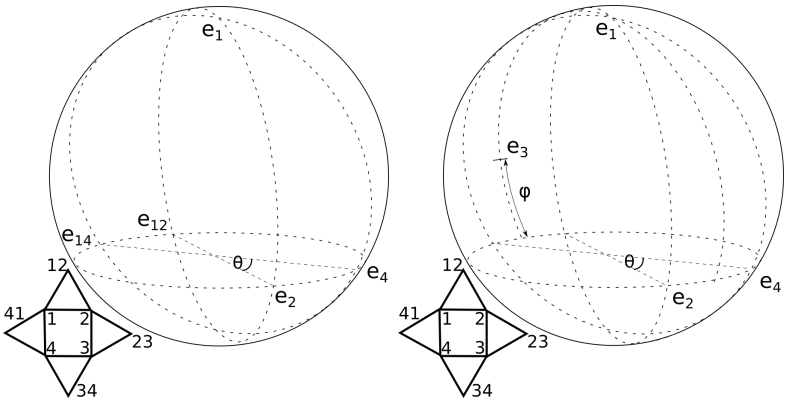

Figure 8: The two general configurations for a loop of 4 triangles. On the left, $e_3 = e_1$ so $e_{12} = e_{23}$ and $e_{14} = e_{34}$. The great circle passing through e_1, e_2, e_{12} and the great circle passing through e_1, e_4, e_{14} make an angle θ. On the right, one has $e_1 \neq e_3$, and the great circle through e_1 and e_3 is the smallest bisector of the two others. e_3 is at (spherical) distance ϕ from the circle $\{e \cdot e_1 = -\frac{1}{2}\}$, where $\tan(\pi/3 - \phi/2) = 2\cos(\theta/2)$. We omitted to draw $e_{12}, e_{23}, e_{34}, e_{41}$ for simplicity.

5.7.4 A numerical example

The last example we treat is the case of a loop of 4 triangles. In this setting, the minimal set is not a submanifold but a union of three submanifolds, with transverse intersection. The general configuration is shown in Figure 8. We believe that the intersections correspond in fact to the case of crossing along a submanifold (see Definition 5.5.5). From Proposition 5.7.2, the three first conditions in Definition 5.5.5 are satisfied, and an explicit computation of the Hessian matrix yields condition 4. We only have numerical proof for the behaviour of μ near the crossing submanifold (see Figure 10), since we cannot give an explicit expression for μ in this setting.

In this example, the crossing submanifolds correspond to the coplanar configurations, so that Figure 10 is a strong indication that μ is, in this example, minimal along coplanar configurations.

6

INTERMEZZO: THE BERGMAN KERNEL IN CONSTANT CURVATURE

In Part I of this thesis, we applied the techniques developed for the study of the Szegő kernel in the C^∞ Kähler or almost Kähler setting, in order to study the spectrum of Toeplitz operators with smooth symbols. Various error terms are systematically capped at $O(N^{-\infty})$ under these assumptions; in order to study finer quantum effects such as tunnelling, it is necessary to impose real-analytic regularity of the manifold and symbol. In Part II we will develop specific tools to this end, but before we do so, we devote a chapter to the much simpler case of manifolds with constant sectional curvature. On these manifolds, one can provide an asymptotic expansion of the Bergman kernel in a relatively elementary way. Such is the goal of this chapter; in Section 6.1 we introduce the geometrical ingredients necessary to shift the discussion from the circle bundle point of view (Subsection 2.2.3) to the line bundle setting (Subsection 2.2.4) and state our main theorem, which we prove in the rest of this chapter.

This chapter coincides with our article [Del18b].

6.1 Introduction

6.1.1 Nature of the Bergman kernel

The Bergman projector S_N is a linear operator mapping the space $H^0(M, L^{\otimes N})$ of holomorphic functions, to itself. Here we describe what it means for such an operator to have an integral kernel, and the nature of this kernel.

If E and F are finite-dimensional vector spaces, then it is well known that the space $L(F, E)$ of linear opeators from E to F can be identified with $F \otimes E^*$ where E^* is the dual of E. Using this, let us construct, for any two line bundles $E_1 \xrightarrow{\pi_1} M_1$ and $E_2 \xrightarrow{\pi_2} M_2$ over Riemannian manifolds, a space of kernels $E_1 \boxtimes E_2^*$ for linear operators which associate, to a section of E_2, a section of E_1.

The space $E_1 \boxtimes E_2^*$ will be constructed as a vector bundle over $M_1 \times M_2$. An informal definition is that the fiber $(E_1 \boxtimes E_2^*)_{(x,y)}$ over a point $(x, y) \in M_1 \times M_2$ is defined as the tensor product $(E_1)_x \otimes (E_2)_y^*$.

One can formally build $E_1 \boxtimes E_2^*$ in two steps. The first step is to associate to $E_1 \xrightarrow{\pi_1} M_1$ a bundle $E_1' \xrightarrow{\pi_1'} M_1 \times M_2$ as follows:

$$E_1' = E_1 \times M_2$$
$$\pi_1'(e, y) = (\pi_1(e), y).$$

Then $(E_1')_{(x,y)} = (\pi_1')^{-1}((x, y)) = \pi_1^{-1}(x) \times \{y\} \simeq (E_1)_x$. Similarly, from the dual bundle E_2^* of E_2, one can build $E_2^{*'} \xrightarrow{\pi_2'} M_1 \times M_2$. Then, the second step is to define

$$E_1 \boxtimes E_2^* = E_1' \otimes E_2^{*'}.$$

Then the fibre over one point reads

$$(E_1 \boxtimes E_2^*)_{(x,y)} \simeq (E_1')_{(x,y)} \otimes (E_2^{*'})_{(x,y)} \simeq (E_1)_x \otimes (E_2)_y^*,$$

as prescribed.

A smooth section of $E_1 \boxtimes E_2^*$ gives a linear operator between compactly supported, smooth sections of E_2 and sections of E_1. Indeed, if K_A is a smooth section of $E_1 \boxtimes E_2^*$, then for any compactly supported, smooth section s of E_2 one can define the section As of E_1 as

$$(As)(x) = \int_{M_2} K_A(x,y)s(y)\mathrm{d}Vol(y).$$

Indeed, $K_A(x,y) \in (E_1)_x \otimes (E_2)_y^*$ is a linear operator from $(E_2)_y$ (to which $s(y)$ belongs) and $(E_1)_x$. Then the integral makes sense as taking values in $(E_1)_x$, so that As is well-defined as a section of E_1.

In particular, in our setting the Bergman projector S_N admits a kernel as an element of $L^{\otimes N} \boxtimes \overline{L}^{\otimes N}$. Indeed, since $H^0(M, L^{\otimes N})$ is finite-dimensional, it is spanned by a Hilbert base $s_1, \ldots, s_{d_N}$ of holomorphic sections of $L^{\otimes N}$. Then the kernel of S_N is

$$S_N(x,y) = \sum_{i=1}^{d_N} s_i(x) \otimes \overline{s_i(y)}.$$

6.1.2 Statement of the main result

Definition 6.1.1. A Kähler manifold (M, ω, J) has *constant curvature* under the two following conditions:

- For every two points $x, y \in M$, there exist an open set $U \in M$ containing x, an open set $V \in M$ containing y, and a biholomorphism $\rho : U \mapsto V$ which preserves ω.
- For every point $x \in M$, there exist an open set $U \in M$ containing x and an action of $U(d)$ by ω-preserving biholomorphisms on U, with x as only common fixed point, such that the induced linear action on T_xM is conjugated to the tautological action of $U(d)$ on $\mathbb{C}^d$.

There is a one-parameter family of local models for manifolds with constant curvature of fixed dimension d [Haw53]: for positive curvature $c > 0$, the rescaled complex projective space $\mathbb{CP}^d$; for zero curvature $c = 0$, the vector space $\mathbb{C}^d$; for negative curvature $c > 0$, the rescaled hyperbolic space $\mathbb{H}^{2d}$. In particular, on a Kähler manifold (M, ω, J) with constant curvature, in the real-analytic structure given by (M, J), the symplectic form ω is real-analytic.

Using the standard notion of holomorphic extensions of real-analytic functions on totally real submanifolds, let us define what will be the kernel of the Bergman projector, up to a constant multiplicative factor and an exponentially small error.

Definition 6.1.2 (A particular section of $L^{\otimes N} \boxtimes \overline{L}^{\otimes N}$)**.** The bundle $L \boxtimes \overline{L}$, when restricted to the diagonal $M_\Delta = \{(x,y) \in M \times M, x = y\}$, is the trivial line bundle $M \times \mathbb{C} \to M$. Moreover, if the first component of $M \times M$ is endowed with the complex structure on M, and the second component with the opposite complex

structure (we informally call $M \times \overline{M}$ this complex manifold), then M_Δ is a totally real submanifold of $M \times \overline{M}$.

Over a small neighbourhood of M_Δ in $M \times M$, one can then uniquely define Ψ^1 as the unique holomorphic section of $L \boxtimes \overline{L}$ which is equal to 1 on M_Δ.

This section is locally described at follows: let s be a non-vanishing holomorphic section of L over a small open set $U \subset M$. Let $\phi = -\frac{1}{2}\log|s|_h$. Then ϕ is real-analytic, so that it admits a holomorphic extension $\widetilde{\phi}$, defined on $U \times \overline{U}$ (again, the diagonal copy of U is totally real in $U \times \overline{U}$). Then

$$\Psi^1(x,y) = e^{2\widetilde{\phi}(x,y)} s(x) \otimes \overline{s(y)}.$$

We then define Ψ^N as $(\Psi^1)^{\otimes N}$, which is a section of $L^{\otimes N} \boxtimes \overline{L}^{\otimes N}$.

Theorem 6.1. *Let M be a quantizable Kähler manifold of complex dimension d and suppose M is a product of compact Kähler manifolds with constant curvature.*

Then the Bergman projector S_N on M has an approximate kernel: there is a sequence of real coefficients $(a_i)_{0\le i\le d}$, and positive constants c, C such that, for all $(x,y) \in M \times M$ and for all $N \ge 1$, one has

$$\left\| S_N(x,y) - \Psi^N(x,y) \sum_{k=0}^{d} N^{d-k} a_k \right\|_h \le C e^{-cN}.$$

If M has constant curvature κ, then

$$\sum_{k=0}^{d} N^{d-k} a_k = \frac{1}{\pi^d}(N-\kappa)(N-2\kappa)\dots(N-d\kappa).$$

A proof of Theorem 6.1 using advanced microlocal analysis (local Bergman kernels) was first hinted in [Ber12] and detailed in [HLX17], where the coefficients a_k are explicitely computed through an explicit expression of the Kähler potential ϕ in a chart. We propose to prove Theorem 6.1 without semiclassical tools, and to recover the coefficients a_k from an elementary observation of the case of positive curvature.

Theorem 6.1 implies exponential approximation in the L^2 operator sense. Indeed, if K is a section of $L^{\otimes N} \boxtimes \overline{L}^{\otimes N}$ with $\|K(x,y)\|_h \le C$ for all $(x,y) \in M^2$, then for $u \in L^2(M, L^{\otimes N})$ one has

$$\begin{aligned}
\int_M \left\| \int_M \langle K(x,y), u(y)\rangle_h \mathrm{d}y \right\|_h^2 \mathrm{d}x &\le \int_M \int_M \|\langle K(x,y), u(y)\rangle_h\|_h^2 \mathrm{d}y\mathrm{d}x \\
&\le \int_M \int_M \|K(x,y)\|_h^2 \|u(y)\|_h^2 \mathrm{d}x\mathrm{d}y \\
&\le C^2 Vol(M) \|u\|_{L^2}^2.
\end{aligned}$$

Expressions for the Bergman kernel such as the one appearing in Theorem 6.1 were first obtained by Charles [Cha03] in the smooth setting; in this weaker case the section Ψ^N is only defined at every order on the diagonal, which yields an $O(N^{-\infty})$ remainder.

Our proof of Theorem 6.1, does not rely on microlocal analysis; the only partial differential operator involved is the Cauchy-Riemann operator $\overline{\partial}$ acting on $L^2(M, L^{\otimes N})$.

We use the following estimate on this operator: if M is compact, there exists $C > 0$ such that, for every $N \geq 1$ and $u \in L^2(M, L^{\otimes N})$, one has:

$$\|\overline{\partial} u\|_{L^2} \geq C\|u - S_N u\|_{L^2}. \tag{17}$$

This estimate follows from the work of Kohn [Koh63; Koh64], which relies only on the basic theory of unbounded operators on Hilbert spaces; it is widely used in the asymptotic study of the Bergman kernel, where it is sometimes named after Hörmander or Kodaira.

6.2 Radial holomorphic charts

Kähler potentials on a Kähler manifold (M, J, ω) are characterised by the following property. If ρ is a local holomorphic chart for M, the pulled-back symplectic form $\rho^*\omega$ can be seen as a function of $\mathbb{C}^d$ into anti-Hermitian matrices of size $2d$. The closure condition $d\omega = 0$ is then equivalent to the existence of a real-valued function ϕ on the chart such that $i\partial\overline{\partial}\phi = \rho^*\omega$. Such a ϕ is a Kähler potential.

From now on, (M, J, ω) denotes a compact quantizatble Kähler manifold of constant curvature, of complex dimension d, and (L, h) is the prequantum bundle over M.

Near every point $P_0 \in M$, we will build a *radial holomorphic chart* using the constant curvature property. This chart is the main ingredient in the construction of the approximate coherent states.

Proposition 6.2.1. *For every $P_0 \in M$, there is an open set $U \subset M$ with $P_0 \in U$, an open set $V \subset \mathbb{C}^d$ invariant under $U(d)$, and a biholomorphism $\rho : V \mapsto U$, such that $\rho^*\omega$ is invariant under $U(n)$.*

In particular, in this chart, there exists a Kähler potential ϕ which depends only on the distance to the origin, with real-analytic regularity.

Proof. Let $\rho_0 : V_0 \mapsto U_0$ be any local holomorphic chart to a neighbourhood of P_0, with $\rho_0(0) = P_0$.

Since M has constant curvature, there exists an open set $P_0 \in U_1 \subset U_0$ and an action of $U(n)$ on U_1 such that, for any $g \in U(d)$, one has

$$\begin{aligned} D(x \mapsto \rho_0^{-1}(g \cdot \rho_0(x)))(0) &= g \\ (g\cdot)^* J &= J \\ (g\cdot)^* \omega &= \omega. \end{aligned}$$

In particular, for $g \in U(d)$, the map $\rho_g : x \mapsto g \cdot \rho_0(g^{-1}x)$ is a biholomorphism from $V_2 = \bigcap_{g \in U(d)} g \circ \rho_0^{-1}(U_1)$ onto its image $U_2(g)$.

For $x \in \bigcap_{g \in U(d)} U_2(g)$, let us define

$$\sigma(x) = \int_{U(d)} \rho_g^{-1}(x) \mathrm{d}\mu_{Haar}(g).$$

Then $D(\sigma \circ \rho_0)(0) = I$. Hence, σ is a biholomorphism, from a small $U(d)$ invariant open set $U \ni P_0$ into a small $U(d)$ invariant open set $V \ni 0$. By construction σ is g-equivariant, in the sense that $\sigma(gx) = g \cdot \sigma(x)$. Then σ^{-1} is the requested chart since ω is invariant under the action of $U(d)$ on U.

Let us proceed to the second part of the Proposition. We first let ϕ_1 be any real-analytic Kähler potential in the chart σ^{-1}. We then define

$$\phi(x) = \int_{g \in U(n)} \phi_1(gx) \mathrm{d}\mu_{Haar}(g).$$

Then ϕ is a radial function since $U(d)$ acts transitively on the unit sphere. Moreover, since $\sigma_* \omega$ is $U(d)$-invariant then $x \mapsto \phi_1(gx)$ is a Kähler potential, so that the mean value ϕ is a Kähler potential. □

Remark 6.2.2. There is exactly one degree of freedom in the choice of the chart ρ in Proposition 6.2.1: the precomposition by a scaling $z \mapsto \lambda z$ preserves all requested properties. In general, the metric $\sigma_* \Re(\omega)$, at zero, is a constant times the standard metric. This constant can be modified by the scaling above. Hence, without loss of generality, one can choose the chart so that the Kähler potential has the following Taylor expansion at zero:

$$\phi(x) = \frac{|x|^2}{2} + O(|x|^3),$$

so that the metric $\sigma^* g$, at zero, is the standard metric.

Definition 6.2.3. A chart satisfying the conditions of Proposition 6.2.1, such that the radial Kähler potential has the following Taylor expansion at zero:

$$\phi(x) = \frac{|x|^2}{2} + O(|x|^3),$$

is called a *radial holomorphic chart.*

The radial Kähler potential ϕ admits in fact an explicit expression, which depends on the curvature and the dimension. We will not use these expressions in this chapter (including when computing $a(N)$ in Section 6.6).

The following elementary fact will be used extensively:

Proposition 6.2.4. *The radial Kähler potential ϕ of a radial holomorphic chart is strongly convex. In particular, for all $x \neq 0$ in the domain of ϕ one has $\phi(x) > 0$.*

Proof. From the Taylor expansion $\phi(x) = \frac{|x|^2}{2} + O(|x|^3)$, one deduces that the real Hessian matrix of ϕ is positive definite at zero. Near any point $x \neq 0$ which belongs to the domain of ϕ, in spherical coordinates the function ϕ depends only on the distance r to the origin. The Levi form $\frac{\partial^2 \phi}{\partial z_i \partial \overline{z_j}}(x)$, which is Hermitian positive definite (since ϕ is strongly pseudo-convex), is then equal to $\frac{\partial^2 \phi}{\partial r^2}(r) Id$. In particular, $\frac{\partial^2 \phi}{\partial r^2} > 0$ everywhere, so that ϕ is strongly convex at x. □

6.3 Approximate coherent states

We first recall the notion of coherent states in Berezin-Toeplitz quantization.

Definition 6.3.1. Let $(P_0, v) \in L$. We define the associated coherent state, which is a section of $L^{\otimes N}$, as follows:

$$\psi^N_{P_0,v} = (u \mapsto \langle u(P_0), v\rangle_h)^{*_{H^0(M,L^{\otimes N})}}.$$

That is, the evaluation map $u \mapsto \langle u(P_0), v\rangle_h$ is a linear operator on $H^0(M, L^{\otimes N})$, and by the Riesz representation theorem, there exists $\psi^N_{P_0,v}$ such that linear map is $\langle \psi^N_{P_0,v}, \cdot\rangle$.

Let us use the radial charts above to build an approximation for coherent states on a Kähler manifold with constant curvature.

Proposition 6.3.2. *There exists $r > 0$ such that the following is true.*

1. *Let $P_0 \in M$. There exists a radial holomorphic chart near P_0, whose domain contains $B(0, r)$.*

2. *Let ϕ denote the radial Kähler potential near P_0. For all $N \geq 1$ the quantity*

$$a(N) = \int_{B(0,r)} \exp(-N\phi(|z|))\mathrm{d}z\mathrm{d}\overline{z}$$

is well-defined and does not depend on P_0.

Proof.

1. Let $P_1 \in M$. By Proposition 6.2.1 there exists a radial holomorphic chart near P_1. Since M has constant curvature, a small neighbourhood of any $P_0 \in M$, of size independent of P_0 since M is compact, can be mapped into a neighbourhood of $P_1 \in M$. By restriction of the radial holomorphic chart of Proposition 6.2.1 to this neighbourhood, whose preimage contains a small ball around zero, this defines a chart around P_0. Since M is compact, there is a radius r such that, for every $P_0 \in M$, the closed ball $\overline{B(P_0, r)}$ is contained in the domain of the chart around P_0.

2. By construction of the chart above, the Kähler potential ϕ does not depend on P_0. Moreover, ϕ is a smooth function on $\overline{B(0, r)}$, hence the claim..

□

Remark 6.3.3. We will see at the end of the proof of Theorem 6.1 that $a(N)^{-1}$ is exponentially close to a polynomial in N.

From now on, r is as in the claim of Proposition 6.3.2.

Proposition 6.3.4. *Let $(P_0, v) \in L$. The action of $U(n)$ on a neighbourhood U of P_0 in M can be lifted in an action on L_U.*

Proof. By definition of L, if V is the preimage of U by a radial holomorphic chart, the bundle (L_U, h) is isomorphic to

$$(V \times \mathbb{C}, \exp(-\phi(z))|u|^2).$$

Since ϕ is invariant under $U(n)$, the linear action of $U(n)$ on V can be trivially extended to $V \times \mathbb{C}$ and preserves the metric. □

In order to treat local holomorphic sections of a prequantum bundle over a quantizable compact Kähler manifold with constant curvature, let us define the Ancillary space and the approximate coherent states:

Definition 6.3.5. Let ϕ be the radial Kähler potential on M and r be as in Proposition 6.3.2. Let $N \in \mathbb{N}$. The ancillary space is defined as

$$A_N = \left\{ u \text{ holomorphic on } B(0,r), \int_{B(0,r)} e^{-N\phi(z)}|u|^2 \leq +\infty \right\}.$$

It is a Hilbert space with the scalar product

$$\langle u, v\rangle_{A_N} = \int_{B(0,r)} e^{-N\phi(z)} u(z)\overline{v(z)}\mathrm{d}z.$$

The set A_N consists of functions belonging to the usual Hardy space of the unit ball, but the scalar product is twisted by the Kähler potential ϕ.

Since the function ϕ appearing in the definition of A_N is a universal local Kähler potential on M, for each $(P_0, v) \in L^*$ there is a natural isomorphism (up to multiplication of all norms by $\|v\|_h$) $\mathfrak{S}^N_{P_0,v}$ between A_N and the space of L^2 local holomorphic sections $H^0(U, L^{\otimes N})$ where $U = \sigma^{-1}_{P_0}(B(0,r))$. We define $\widetilde{\psi}^N_{P_0,v}$ as the element of $H^0(U, L^{\otimes N})$ associated with the constant function $a(N)^{-1} \in A_N$.

We set $\widetilde{\psi}^N_{P_0,v}$ to be zero outside $\sigma^{-1}(B(0,r))$ so that $\widetilde{\psi}^N_{P_0,v} \in L^2(M, L^{\otimes N})$. The function $\widetilde{\psi}^N_{P_0,v}$ is equivariant with respect to v: one has

$$\widetilde{\psi}^N_{P_0,v} = \left(\overline{v}/\overline{v'}\right)^N \widetilde{\psi}^N_{P_0,v'}.$$

This allows us to define the approximate normalized coherent state $\widetilde{\psi}_{P_0}$ as an element of $L^2(M, L^{\otimes N}) \otimes \overline{L}^{\otimes N}_{P_0}$.

Let us prove that the approximate coherent states are very close to $H_N(M, L)$:

Proposition 6.3.6. *There exists $c > 0$ and $C > 0$ such that, for all $P_0 \in M$,*

$$\|S_N \widetilde{\psi}^N_{P_0} - \widetilde{\psi}_{P_0}\|_{L^2} \leq Ce^{-cN}.$$

Proof. Let χ denote a test function on $\mathbb{R}$ which is smooth and such that $\chi = 1$ on $[0, \frac{r}{2}]$ and $\chi = 0$ on $[r, +\infty)$.

The section $(\chi \circ |\sigma|)\widetilde{\psi}^N_{P_0}$ is smooth; since $\widetilde{\psi}^N_{P_0}$ is holomorphic on $\sigma^{-1}(B(0,r))$ and decays exponentially fast far from P_0, one has

$$\|\overline{\partial}(\chi \circ |\sigma|)\widetilde{\psi}^N_{P_0}\|_{L^2} \leq Ce^{-cN}.$$

From Kohn's estimate (17) we deduce that

$$\|S_N(\chi \circ |\sigma|)\widetilde{\psi}^N_{P_0} - (\chi \circ |\sigma|)\widetilde{\psi}_{P_0}\|_{L^2} \leq Ce^{-cN}.$$

In addition, since $\phi > c$ on $B(0,r) \setminus B(0,r/2)$, one has

$$\|(\chi \circ |\sigma|)\widetilde{\psi}^N_{P_0} - \widetilde{\psi}^N_{P_0}\|_{L^2} \leq Ce^{-cN}.$$

Since S_N is an orthogonal projector, its operator norm is bounded by 1, so that the previous estimates implies

$$\|S_N(\chi \circ |\sigma|)\widetilde{\psi}^N_{P_0} - S_N\widetilde{\psi}^N_{P_0}\|_{L^2} \leq Ce^{-cN}.$$

This ends the proof. □

To show that our approximate coherent states are indeed exponentially close to the actual coherent states we will use the following lemma.

Lemma 6.3.7. *A continuous linear form on A_N invariant by linear unitary changes of variables is proportional to the continuous linear form $v \mapsto \langle v, 1\rangle$.*

In particular, the continuous linear form $A_N \ni u \mapsto u(0)$ is equal to the scalar product with the constant function $a(N)^{-1}$

Proof. A Hilbert basis of A_N is given by the normalised monomials $e_\nu z \mapsto c_\nu z^\nu$ for $\nu \in \mathbb{N}^d$, for some $c_\nu > 0$. Special elements of $U(n)$ are the diagonal matrices $\mathrm{diag}(\exp(i\theta_1), \dots, \exp(i\theta_d))$ which send e_ν into $\exp(i\theta \cdot \nu)e_\nu$.

A linear form η invariant under $U(d)$ must be such that $\eta(e_\nu) = \exp(i\theta \cdot \nu)\eta(e_\nu)$ for every θ, ν. In particular, $\nu \neq 0 \Rightarrow \eta(e_\nu) = 0$. Since η is continuous we deduce that η is proportional to the scalar product with $e_0 = c_0 1$.

For the second part of the Proposition we only need to prove that the multiplicative factor between the two continuous $U(d)$-invariant linear forms of A_N, evaluation at 0 on one side, scalar product with $a(N)^{-1}$ on the other side, is 1. By Definition of $a(N)$, the scalar product in A_N of $a(N)^{-1}$ with $a(N)^{-1}$ is $a(N)^{-1}$, moreover the evaluation at zero of $a(N)^{-1}$ is $a(N)^{-1}$, hence the claim. □

The functions $\widetilde{\psi}^N_{P_0,v}$ mimic the definition of coherent states.

Proposition 6.3.8. *There exists $c > 0$ such that, for any $(P_0, v_0), (P_1, v_1) \in L^*$,*

- *If $\mathrm{dist}(P_0, P_1) \leq \frac{r}{2}$, then*
$$\left|\langle \widetilde{\psi}^N_{P_1,v_1}, \widetilde{\psi}^N_{P_0,v_0}\rangle - \langle \widetilde{\psi}_{P_1,v_1}(P_0), v_0^{\otimes N}\rangle_h\right| = O(e^{-cN}).$$
- *In general, one has*
$$|\langle \widetilde{\psi}^N_{P_1,v_1}, \widetilde{\psi}^N_{P_0,v_0}\rangle| \leq Ce^{-cN\,\mathrm{dist}(P_0,P_1)^2}.$$

Proof.

- The continuous linear functional on A_N which sends u to $u(0)$ is invariant under the action of $U(n)$ (since 0 is a fixed point), so that, by Lemma 6.3.7, it is proportional to the scalar product with a constant. This property, read in the map $\mathfrak{S}^N_{P_0,v_0}$, means that, for every $(P_1, v_1) \in L$ the scalar product
$$\langle \widetilde{\psi}^N_{P_0,v_0}, \widetilde{\psi}^N_{P_1,v_1}\rangle$$
is a constant (independent of P_1) times $\langle S_N \widetilde{\psi}_{P_1,v_1}(P_0), v_0^{\otimes N}\rangle_h$. The normalizing factor $a(N)$ is such that both sides are equal to 1 if $P_1 = P_0$. This ends the proof since S_N is almost identity on the almost coherent states.
- If $\mathrm{dist}(P_0, P_1) \geq 2r$ then $\widetilde{\psi}^N_{P_0,v_0}$ and $\widetilde{\psi}^N_{P_1,v_1}$ have disjoint support so that the scalar product is zero.

  If $r/2 \leq \mathrm{dist}(P_0, P_1) \leq 2r$ then $\widetilde{\psi}^N_{P_1,v_1}$ is exponentially small on $B(P_0, r/4)$ and $\widetilde{\psi}^N_{P_0,v_1}$ is exponentially small outside this ball so that the scalar product is smaller than $Ce^{-cN(4r)^2}$ for some $c > 0$.

  If $P_1 \in B(P_0, r/2)$, one can apply the previous point; the claim follows from the fact that $\phi(|x|) \geq c|x|^2$ on $B(P_0, r/2)$.

□

6.4 Approximate Bergman projector

We can now define the approximate Bergman projector by its kernel: $\widetilde{S}_N$ is a function on $\overline{L}^{\otimes N} \boxtimes L^{\otimes N}$ which is linear in the fibres (or, equivalently, a section of $L^{\otimes N} \boxtimes \overline{L}^{\otimes N}$) defined by the formula:

$$\widetilde{S}_N((x,v),(y,v')) = \langle \widetilde{\psi}^N_{x,v}, \widetilde{\psi}^N_{y,v'} \rangle.$$

We wish to prove that this operator is very close to the actual Bergman projector, defined by the actual coherent states $\psi^N_{P_0,v}$:

Proposition 6.4.1. *Let $(P_0, v) \in L$. Then $S_N \widetilde{\psi}^N_{P_0,v} = \psi^N_{P_0,v}$.*

Proof. Let $U = B(P_0, r)$. By construction, the scalar product of $\widetilde{\psi}^N_{P_0,v}$ with any element of $H_N(U, L^{\otimes N})$ is the value at P_0 of this element, taken in scalar product with v. As $H_N(M, L^{\otimes N}) \subset H_N(U, L^{\otimes N})$ in a way which preserves the scalar product with $\widetilde{\psi}^N_{P_0,v}$, from Definition 6.3.1 one has $S_N \widetilde{\psi}^N_{P_0,v} = \psi^N_{P_0,v}$. □

From Propositions 6.3.6 and 6.4.1 we deduce that approximate coherent states are, indeed, close to coherent states. In particular,

Proposition 6.4.2. *Uniformly on $(x, y) \in M \times M$, there holds*

$$\|\widetilde{S}_N(x,y) - S_N(x,y)\|_h = O(e^{-cN}).$$

Proof. The exact Bergman kernel is expressed in terms of the coherent states as:

$$S_N((x,v),(y,v')) = \langle \psi^N_{x,v}, \psi^N_{y,v'} \rangle.$$

From this and the Definition of $\widetilde{S}_N$, since

$$S_N \widetilde{\psi}^N_{x,v} = \psi^N_{x,v} = \widetilde{\psi}^N_{x,v} + O(e^{-cN}),$$

the kernels of S_N and $\widetilde{S}_N$ are exponentially close. □

6.5 Approximate projector in a normal chart

To conclude the proof of Theorem 6.1 in the constant curvature case, it only remains to compute an approximate expression for $\widetilde{S}_N(x,y) = \langle \widetilde{\psi}^N_x, \widetilde{\psi}^N_y \rangle$. At first sight, this looks easy. Indeed, on the diagonal, $\widetilde{S}_N(x,x) = a(N)^{-1}$. Moreover, $\widetilde{S}_N$ is $O(e^{-cN})$-close from the Bergman kernel S_N, which is holomorphic in the first variable and anti-holomorphic in the second variable. However, one cannot conclude that $\widetilde{S}_N$ is exponentially close to the holomorphic extension of $a(N)^{-1}$ (that is, $a(N)^{-1}\Psi^N$). Indeed, $S_N(x,x) - a(N)^{-1}$, while exponentially small, might oscillate very fast, so that its holomorphic extension is not uniformly controlled.

By studying change of charts between radial holomorphic charts, one can prove the following Proposition.

Proposition 6.5.1. *There exists $c > 0$ and $C > 0$ such that, for all $(x, y) \in M \times M$, there holds*

$$\left\| \widetilde{S}_N(x,y) - \Psi^N(x,y) a(N)^{-1} \right\|_h \leq C e^{-cN}.$$

Proof. It is sufficient to prove the claim for x, y close enough from each other.

We first need to understand how to change from the radial holomorphic chart around x to the radial holomorphic chart around y. By hypothesis, if x and y are two points in M at distance less than $\frac{r}{2}$, if ρ denotes a radial chart at x, there is a map $\sigma : B(0, \frac{r}{2}) \to B(0, r)$, which is biholomorphic on its image and which preserves the metric $\rho^* g$, and such that $\sigma(0) = \rho(y)$. The associated holomorphic map on $B(0, \frac{r}{2}) \times \mathbb{C}$ which preserves the Hermitian metric pulled back by ρ on the fibre is of the form:

$$(z, v) \mapsto \left(\sigma(z), \exp\left(\frac{1}{2}(\phi(|z|^2) - \phi(|\sigma(z)|^2)) + i f_\sigma(z)\right) v\right), \tag{18}$$

where f_σ is such that the function

$$m \mapsto \phi(|z|^2) - \phi(|\sigma(z)|^2) + i f_\sigma(z)$$

is holomorphic. Such a f_σ exists and is unique up to an additive constant: indeed, since σ preserves the metric g, $z \mapsto \phi(|\sigma(z)|^2)$ is a Kähler potential on $B(0, \frac{r}{2})$. Hence, the map

$$z \mapsto \phi(|z|^2) - \phi(|\sigma(z)|^2)$$

is harmonic, so that it is the real part of a holomorphic function.

Then, by (18), in a radial holomorphic chart around x, the almost coherent state $\widetilde{\psi}^N_{y,v'}$ is written as

$$z \mapsto a(N)^{-1} \mathbb{1}_{V(y)} \overline{v'} \exp\left(-\frac{N}{2}\phi(|\sigma(z)|^2) + i f_\sigma(z)\right).$$

By Proposition 6.3.8, the scalar product with $\widetilde{\psi}^N_{x,v}$, with y close to x, is

$$\langle \widetilde{\psi}^N_{y,v'}, \widetilde{\psi}^N_{x,v} \rangle = a(N)^{-1} (v\overline{v'}) \exp\left(-\frac{N}{2}\phi(|\rho(y)|^2) + iN f_\sigma(0)\right) + O(e^{-cN}).$$

In particular, in a radial holomorphic chart ρ around x, the approximate Bergman kernel evaluated at x has the following form for z small:

$$\widetilde{S}_N(\rho(z), \rho(0)) = a(N)^{-1} \exp(N g(z)) \psi^N_x(\rho(z)) \overline{\psi^N_x(\rho(0))} + O(e^{-cN}),$$

where g is holomorphic. Using another change of charts given by (18), the form of the approximate Bergman kernel, near the diagonal, is

$$\widetilde{S}_N(\rho(z), \rho(w)) = a(N)^{-1} \exp(N F(z, w)) \widetilde{\psi}^N_x(\rho(z)) \overline{\widetilde{\psi}^N_x(\rho(w))} + O(e^{-cN}),$$

where F is holomorphic in the first variable and anti-holomorphic in the second variable.

Moreover, $\widetilde{S}_N(z, z) = \widetilde{S}_N(0, 0) = a(N)^{-1}$, hence $F(z, \overline{w}) = \widetilde{\phi}(z \cdot \overline{w})$.

The expression of the phase in coordinates coincides with the section Ψ^N of Definition 6.1.2 (the non-vanishing section s here is $\widetilde{\psi}^1_x$). Thus, the Bergman kernel can be written as

$$\widetilde{S}_N(x, y) = \Psi^N(x, y) a(N)^{-1} + O(e^{-cN}).$$

□

We will compute explicitely $a(N)^{-1}$ in Section 6.6. Up to this computation, the proof of Theorem 6.1 is complete in the case of a single manifold with constant curvature.

It remains to prove how to pass from manifolds with constant curvature to direct products of such. This relies on the following Proposition.

Proposition 6.5.2. *Let M_1, M_2 be compact quantizable Kähler manifolds and L_1, L_2 be the associated prequantum line bundles. Then $L_1 \boxtimes L_2$ is the prequantum line bundle over $M_1 \times M_2$, and*

$$H^0(M_1 \times M_2, (L_1 \boxtimes L_2)^{\otimes N}) \simeq H^0(M_1, L_1^{\otimes N}) \otimes H^0(M_2, L_2^{\otimes N}).$$

Proof. There is a tautological, isometric injection

$$\iota : H^0(M_1, L_1^{\otimes N}) \otimes H^0(M_2, L_2^{\otimes N}) \hookrightarrow H^0(M_1 \times M_2, (L_1 \boxtimes L_2)^{\otimes N})$$

which is such that, for $(s_1, s_2) \in H^0(M_1, L_1^{\otimes N}) \times H^0(M_2, L_2^{\otimes N})$ and $(x, y) \in M_1 \times M_2$, one has

$$\iota(s_1 \otimes s_2)(x, y) = s_1(x) \otimes s_2(y).$$

It remains to prove that any element of $H^0(M_1 \times M_2, (L_1 \boxtimes L_2)^{\otimes N})$ belongs to the image of the element above. To this end, let us prove that, for any $(x_1, v_1) \in L_1$ and $(x_2, v_2) \in L_2$, the coherent state at $((x_1, x_2), v_1 \otimes v_2)$ is given by

$$\psi^N_{(x_1,x_2),v_1\otimes v_2} = \iota(\psi^N_{x_1,v_1} \otimes \psi^N_{x_2,v_2}).$$

Indeed, for any $s \in H^0(M_1 \times M_2, (L_1 \boxtimes L_2)^{\otimes N})$, one has

$$\begin{aligned}
&\langle s, \iota(\psi^N_{x_1,v_1} \otimes \psi^N_{x_2,v_2})\rangle \\
&= \int_{M_1} \left\langle \int_{M_2} \langle s(y_1, y_2), \psi^N_{x_2,v_2}(y_2)\rangle_{(L_2)^{\otimes N}_{y_2}} \mathrm{d}y_2, \psi^N_{x_1,v_1}(y_1) \right\rangle_{(L_1)^{\otimes N}_{y_1}} \mathrm{d}x_1 \\
&= \int_{M_1} \langle s(y_1, x_2), \psi^{\otimes N}_{x_1,v_1} \otimes v_2\rangle_{(L_1)^{\otimes N}_{y_1} \otimes (L_2)^{\otimes N}_{x_2}} \mathrm{d}x_1 \\
&= \langle s(x_1, x_2), v_1 \otimes v_2\rangle_{(L_1)^{\otimes N}_{x_1} \otimes (L_2)^{\otimes N}_{x_2}} = \langle s, \psi^N_{(x_1,x_2),v_1\otimes v_2}\rangle.
\end{aligned}$$

The image of ι thus contains all coherent states on $M_1 \times M_2$. Hence, the orthogonal of the range of ι in $H^0(M_1 \times M_2, (L_1 \boxtimes L_2)^{\otimes N})$ is zero, which concludes the proof. □

In particular, the Bergman kernel on a product $M_1 \times M_2$ is given by

$$S_N^{M_1 \times M_2}(x_1, x_2, y_1, y_2) = S_N^{M_1}(x_1, y_1) \otimes S_N^{M_2}(x_2, y_2).$$

This, along with Propositions 6.4.1 and 6.5.1, concludes the proof of Theorem 6.1 up to the study of $a(N)^{-1}$, which we perform in the next section.

6.6 The coefficients of the Bergman kernel

Since, for all $x \in M$, one has $\Psi^N(x,x) = 1$, then the trace of the Bergman kernel is given by

$$\mathrm{tr}(S_N) = \sum_{i=1}^{d_N} 1 = \int_M \sum_{i=1}^{d_N} s_i(x)\overline{s_i(x)}\mathrm{d}x = \int_M S_N(x,x)\mathrm{d}z$$
$$= a(N)^{-1}Vol(M) + O(e^{-cN}).$$

In particular, $a(N)^{-1}$ is exponentially close to an integer divided by $Vol(M)$. Let

$$P(N) = \frac{\mathrm{tr}(S_N)}{Vol(M)}.$$

In this section we compute $P(N)$ in the case of a manifold of dimension d with constant curvature. Since

$$P(N)^{-1} = \int_{B(0,r)} \exp(-N\phi(|z|))\mathrm{d}z\mathrm{d}\overline{z} + O(e^{-cN}),$$

and there is a universal local model for M which depends only on its curvature κ, then $P(N)$ depends only on κ and the dimension d. Moreover, $P(N)^{-1}$ has real-analytic dependence on κ (indeed, in a radial holomorphic chart, the degree 2 differential equation satisfied by ϕ has real-analytic dependence on κ, so that the solution ϕ satisfies the same property by the analytic Picard-Lindelöf theorem). We will give an expression for $P(N)$ which is valid on $\kappa \in \{\frac{1}{k}, k \in \mathbb{N}\}$. Since $P(N)$ is real-analytic in κ, it will follow that this expression is valid for all curvatures. From now on we write $P_\kappa(N)$ to indicate that $P(N)$ depends on N and κ, and only on them.

Let us consider the case of the rescaled projective space:

$$(M_k, \omega_k, J) = (\mathbb{CP}^d, k\omega_{FS}, J_{st}).$$

This space is quantizable; the prequantum bundle is simply

$$L_k = (L_1)^{\otimes k},$$

so that

$$S_{N,k}(x,y) = S_{Nk,1}(x,y).$$

Moreover, the curvature of (M_k, ω_k) is $\frac{1}{k}$. In other terms,

$$P_{\frac{1}{k}}(N) = \frac{Vol(M_1)}{Vol(M_k)} P_1(kN) = k^{-d} P_1(kN).$$

It remains to compute P_1. On $\mathbb{CP}^d$, the prequantum bundle L_1 is explicit: it is $O(1)$, the dual of the tautological line bundle. In this setting,

$$H^0(M, L^{\otimes N}) \simeq \mathbb{C}_N[X_1, \dots, X_d].$$

Hence,

$$P_1(N) = \frac{1}{Vol(\mathbb{CP}^d)} \dim(\mathbb{C}_N[X_1, \dots, X_d]) = \frac{d!}{\pi^d}\binom{N+d}{d} = \frac{1}{\pi^d}(N+1)\dots(N+d).$$

Hence, for any κ of the form $\frac{1}{k}$ with $k \in \mathbb{N}$ there holds

$$P_\kappa(N) = \frac{1}{\pi^d}(N+\kappa)(N+2\kappa)\dots(N+d\kappa).$$

Since P_κ has real-analytic dependence on κ, the formula above is true for any $\kappa \in \mathbb{R}$, which concludes the proof.

Part II

ANALYTIC METHODS

In this second part, we study Toeplitz operators and Bergman kernels under the hypothesis of analytic regularity. Our principal motivation is exponential estimates on eigenfunction concentration.

We provide asymptotic formulas for the Bergman projector and Berezin-Toeplitz operators on a compact Kähler manifold. We show (Theorem 8.1) that the Bergman kernel admits an asymptotic expansion in decreasing powers of N, up to an error $O(e^{-cN})$ (with $c > 0$), as soon as the Kähler manifold is real-analytic. We build new semiclassical tools in real-analytic regularity (in particular, new analytic symbol classes, see Definition 7.2.3), which can be of more general use.

This study of the calculus of Toeplitz operators allows us to state results concerning sequences of eigenfunctions of Toeplitz operators $(T_N(f))_{N\geq 1}$ for a real-analytic f. We prove the following (Theorem 8.3): if $(u_N)_{N\geq 1}$ is a sequence of normalised eigenfunctions with eigenvalue near $E \in \mathbb{R}$, that is,

$$T_N(f)u_N = \lambda_N u_N, \qquad \lambda_N \underset{N\to+\infty}{\to} E, \qquad \|u_N\|_{L^2(M,L^{\otimes N})} = 1,$$

and if $V \subset M$ is an open set at positive distance from $\{x \in M, f(x) = E\}$, then

$$\|u_N\|_{L^2(V,L^{\otimes N})} \leq Ce^{-cN}$$

for some $C > 0, c > 0$ independent on N. We say that $(u_N)_{N\in\mathbb{N}}$ has an *exponential decay rate* on V.

We then study, in the special case where f reaches a non-degenerate minimum, a construction of almost eigenfunctions: we build (Theorem 9.1) a sequence of normalised sections $(u(N))_{N\geq 1}$ and a real sequence $(\lambda(N))_{N\geq 1}$, with asymptotic expansions in decreasing powers of N, such that

$$T_N(f)u(N) = \lambda(N)u(N) + O(e^{-cN}).$$

The sequence $u(N)$ takes the form of a Wentzel-Kramers-Brillouin (WKB) ansatz: it is written as

$$u(N) : x \mapsto CN^d e^{N\varphi(x)}(u_0 + N^{-1}u_1 + \ldots).$$

Since $T_N(f)$ is self-adjoint, the existence of an almost eigenfunction automatically implies that $\lambda(N)$ is exponentially close to the spectrum of $T_N(f)$, but not necessarily that $u(N)$ is exponentially close to an eigenfunction. In Theorem 9.1, we also prove that, if f is Morse, the eigenvectors associated with the lowest eigenvalue of $T_N(f)$ are exponentially close to a finite sum of almost eigenvectors $u(N)$ constructed above.

Exponential estimates in semiclassical analysis

Exact or approximate eigenstates of quantum Hamiltonians are often searched for in the form of a WKB ansatz:

$$e^{\frac{\phi(x)}{\hbar}}(a_0(x) + \hbar a_1(x) + \hbar^2 a_2(x) + \ldots),$$

where $\hbar$ is the semiclassical parameter. In the formula above, $\Re(\phi) \leq 0$ so that this expression is extremely small outside the set $\{\Re(\phi) = 0\}$ where the function concentrates.

From this intuition, an interest developed towards decay rates for solutions of PDEs with small parameters. The most used setting in the mathematical treatment of quantum mechanics is the Weyl calculus of pseudodifferential operators [Zwo12]. Typical decay rates in this setting are of order $O(\hbar^\infty)$. Indeed, the composition of two pseudodifferential operators (or, more generally, Fourier Integral Operators) associated with smooth symbols can only be expanded in powers of $\hbar$ up to an error $O(\hbar^\infty)$.

In the particular case of a Schrödinger operator $P_\hbar = -\hbar^2\Delta + V$ where V is a smooth function, one can obtain an *Agmon estimate* [HS84], which is an $O(e^{\frac{\phi(x)}{\hbar}})$ pointwise control of eigenfunctions of $P_\hbar$ with eigenvalues close to E. Here, $\phi < 0$ on $\{V > E\}$. In this setting one can easily conjugate $P_\hbar$ with multiplication operators of the form $e^{-\frac{\phi}{\hbar}}$, which allows one to prove the control above. This conjugation property is not true for more general pseudodifferential operators. Moreover, Agmon estimates yield exponential decay in space variables, and give no information about the concentration rate of the semiclassical Fourier transform, which is only known to decay at $O(\hbar^\infty)$ speed outside zero.

In the setting of pseudodifferential operators on $\mathbb{R}^d$ with *real-analytic* symbols, following analytic microlocal techniques [Sjö82], exponential decay rates in phase space (that is, exponential decay of the FBI or Bargmann transform) were obtained in [Mar92; Sjö83; Mar94a; Mar94b; MS99]. Exponential estimates in semiclassical analysis have important applications in physics [CG88] where they validate the WKB ansatz which, in turn, yields precise results on spectral gaps or dynamics of quantum states (quantum tunnelling). Moreover, on the mathematical level, these techniques can be used to study non-self-adjoint perturbations [HS04; HS08] and resonances [HS86b; Sjö90; MS01; Sjö03; Fau06].

Since exponential decay in phase space for pseudodifferential operators is defined by means of the FBI or Bargmann transform, it seems natural to formulate these questions in terms of Bargmann quantization, which then generalises to Berezin-Toeplitz quantization on Kähler manifolds, where the semiclassical parameter is the inverse of an integer: $\hbar = N^{-1}$. Yet, for instance, the validity of the WKB ansatz for a Toeplitz operator, at the bottom of a non-degenerate real-analytic well, was only performed when the underlying manifold is $\mathbb{C}$ (see [Vor89]), and some results were recently obtained for non-self-adjoint perturbations of Toeplitz operators on complex one-dimensional tori [Rou17].
The analysis of Toeplitz operators depends on the knowledge of the Bergman projector. The original microlocal techniques for the study of this projector [BS75; Zel00; Cha03] allow for a control of the Bergman kernel up to $O(N^{-\infty})$, from which one can deduce $O(N^{-\infty})$ estimates for composition and eigenpairs of Toeplitz operators with smooth symbols ([LF14b] and Part I of this thesis). Based on analytic pseudodifferential techniques, the tools of *Local Bergman kernels* make it possible to show, under real-analyticity hypothesis, exponential (that is, $O(e^{-cN})$) decay of the coherent states in Toeplitz quantization [BBS08]. Recently, this method was used to show an $O(e^{-c\sqrt{N}})$ control of the Bergman kernel under the same hypothesis [HLX17]. Another recent article [Kor18] establishes an $O(e^{-c\sqrt{N}})$ decay rate in the forbidden region for eigenfunctions of Toeplitz operators with smooth symbols.

Outline

In this Part II we propose to show, using new tools of analytic microlocal calculus, that the Bergman kernel admits an expansion with $O(e^{-cN})$ remainder, on analytic Kähler manifolds (Theorem 8.1). There is independent work [RSN18] establishing this result, using local Bergman kernels.
We then prove that Toeplitz operators with real-analytic symbols can be composed and inverted without loss of regularity, on any real-analytic compact quantizable Kähler manifold (Theorem 8.2). As an application, we prove exponential decay rate in the forbidden region under the same hypotheses (Theorem 8.3), and we provide an $O(e^{-cN})$ almost eigenfunction at the bottom of a non-degenerate well (Theorem 9.1).
This part is divided in three chapters. In Chapter 7 we develop the technical framework underlying the study of the Bergman kernel in real-analytic regularity: a precise analytic microlocal calculus. Chapter 8 is devoted to the Bergman kernel and Toeplitz operators in the real-analytic case. In Chapter 9, we use the analytic techniques again to provide a WKB ansatz at the bottom of a non-degenerate well.
In Chapters 8 and 9, we rely crucially on a "well-balanced" condition in the expansions in the stationary phase, which corresponds, in the setting of Toeplitz operators, to the (anti-)Wick quantization rules for contravariant or covariant symbols. This particular information allows us to bound non-trivial quotients of factorials which appear in the expansions.

Pseudodifferential operators, on which exponential estimates were originally studied, also satisfy a "well-balanced" condition: in the term of order k of the composition of two symbols f and g (which is, a priori, a bidifferential operator on f and g of total order $2k$), both symbols are differentiated at most k times. We believe that the techniques developped in this part can be extended to more general "well-balanced" Fourier Integral Operators with real-analytic regularity. This method is somewhat elementary, since the only technical part consists in estimating quotients of factorials and powers by writing them as binomial or multinomial coefficients. Our method sheds some light on the difficulty to formulate equivalence of quantizations in real-analytic settings without a loss of regularity. This fact is of little importance if one is concerned with spectral theory, but precise results (without loss of regularity) about the composition and inversion properties in a given analytic class, such as Theorem 8.2, cannot be passed from one quantization to another if there is a loss of regularity inbetween.

This Part II coincides with our articles [Del18c; Del19]; the order of presentation has been modified.

As for Part I, a particular motivation for this work is the quantization, on $M = (\mathbb{S}^2)^d$, of polynomials in the coordinates (in the standard immersion of $\mathbb{S}^2$ into $\mathbb{R}^3$). The operators obtained are spin operators, with total spin $\frac{N}{2}$. Tunnelling effects in spin systems, in the large spin limit, are widely studied in the physics literature (see [OP15] for a review). This part also aims at giving a mathematical ground to this study.

7

ANALYTIC MICROLOCAL CALCULUS

In this chapter we build the tools that we will use in Chapter 8 to study the Bergman kernel and Toeplitz operators in real-analytic regularity. In Section 7.1 we recall the basic properties of holomorphic extensions of analytic functions and define suitable spaces of holomorphic functions (Definition 7.1.10), which generalise the Hardy spaces of holomorphic functions on the disk. Then, in Section 7.2, we define analytic symbol classes for sequences of functions $(f_k)_{k\geq 0}$ (see Definition 7.2.3) and we give a meaning to the sum $\sum N^{-k} f_k$ up to exponential precision. These symbol classes are more precise than the ones appearing in the literature since [Sjö82]. In Section 7.3 we adapt the stationary phase lemma in analytic regularity, originally developed in [Sjö82], to our precise analytic symbol spaces (Proposition 7.3.3). Section 7.4 contains a few useful combinatorial lemmas.

7.1 Holomorphic extensions

In this section we provide a general formalism for holomorphic extensions of various real-analytic data, which we use throughout Part II. The constructions of holomorphic extensions of real-analytic functions and manifolds is somewhat standard. We refer to [WB59] for details on these constructions. In particular, we study in Subsection 7.1.4 a specific class of analytic function spaces, which is a prerequisite to the Definition 7.2.3 of analytic symbol classes.

7.1.1 Combinatorial notations

In this subsection we recall some basic combinatorial notation. Analytic functions and analytic symbol spaces are defined using sequences which grow as fast as a factorial (see Definitions 7.1.10 and 7.2.3) so that we will frequently need to bound expressions involving binomial or multinomial coefficients.

Definition 7.1.1. Let $0 \leq i \leq j$ be integers. The associated *binomial* coefficient is

$$\binom{j}{i} = \frac{j!}{i!(j-i)!}.$$

Let more generally $(i_k)_{1\leq k\leq n}$ be a family of non-negative integers and let $j \in \mathbb{N}$ be such that $j \geq \sum_{k=1}^n i_k$. The associated *multinomial* coefficient[1] is

$$\binom{j}{i_1, \ldots, i_k} = \frac{j!}{(j - \sum_{k=1}^n i_k)! \prod_{k=1}^n i_k!}$$

1 An alternative definition of multinomial coefficient assumes $j = i_1 + \ldots + i_n$, in which case one defines $\binom{j}{i_1,\ldots,i_n} = \frac{j!}{i_1! \ldots i_n!}$. The definition we give contains this one, and is more consistent with the notation for binomial coefficients.

Definition 7.1.2.

1. A *polyindex* (plural: polyindices) μ is an ordered family $(\mu_1, \dots, \mu_d)$ of non-negative integers. The cardinal d of the family is called the *dimension* of the polyindex (we will only consider the case where d is finite).
2. The norm $|\mu|$ of the polyindex $\mu = (\mu_1, \dots, \mu_d)$ is defined as $\sum_{i=1}^d \mu_i$.
3. The partial order $\leq$ on polyindices of same dimension is defined as follows: $\nu \leq \mu$ when, for every $1 \leq i \leq d$, one has $\nu_i \leq \mu_i$.
4. The factorial $\mu!$ is defined as $\prod_{i=1}^d \mu_i!$. Together with the partial order, this allows to extend the notation for binomial coefficients. If $\nu \leq \mu$, then we define the associated binomial coefficient as
$$\binom{\mu}{\nu} = \frac{\mu!}{\nu!(\mu-\nu)!}$$

A few useful inequalities about binomial coefficients are proved in Section 7.4. We will use extensively the following inequality:

Lemma 7.1.3. *Let $(i_1 \dots, i_n)$ with $\sum_{i=1}^n i_k \leq j$. Then*
$$\binom{j}{i_1, \dots, i_n} \leq (n+1)^j.$$

Proof. One has
$$(n+1)^j = (\underbrace{1+1+\dots+1}_{n+1})^j = \sum_{\substack{(i_1,\dots,i_n) \\ \sum i_k \leq j}} \binom{j}{i_1, \dots, i_n}.$$
As each term in the sum is positive, the sum is greater than any of its terms. □

7.1.2 Extensions of real-analytic functions

The fundamental object that one is allowed to extend in a holomorphic way is a real-analytic function.

Definition 7.1.4. Let $f : U \mapsto V$ be a real-analytic function on an open set $U \in \mathbb{R}^n$, which takes values into a real or complex Banach space E. A *holomorphic extension* of f is a couple $(\widetilde{f}, \widetilde{U})$, where $\widetilde{U}$ is an open set of $\mathbb{C}^n$ and $\widetilde{f} : \widetilde{U} \mapsto E \otimes \mathbb{C}$, such that

- $\overline{\partial}\widetilde{f} = 0$.
- $U \subset \widetilde{U}$,
- $\widetilde{f}|_U = f$

Naturally, two holomorphic extensions coincide on the connected components of their intersections which intersect U since, on a connected open set of $\mathbb{C}^d$, a holomorphic function which vanishes on a real set vanishes everywhere.

If E is a real Banach space then $E \otimes \mathbb{C}$ is the complexification of E; if E is complex to begin with then $E \otimes \mathbb{C} = E$.

The following Proposition gives a natural choice of holomorphic extension:

Proposition 7.1.5. *Let U be an open set of $\mathbb{R}^d$, E be a Banach space and $f : U \mapsto E$ be a real-analytic function.*

Let $x \in U$. There exists a radius $r(x)$ such that the series

$$\sum_{\nu \in \mathbb{N}^d} \frac{\partial^\nu f}{\nu!}(y-x)^\nu$$

is absolutely convergent for all $y \in \overline{B(x, r(x))}$, with limit $f(y)$: we choose $r(x)$ smaller than half of the suprema of all r such that the power series above converge on $B(x, r)$, and such that $B_{\mathbb{R}^d}(x, r(x)) \subset U$.

Then, with

$$\widetilde{U} = \bigcup_{x \in U} B_{\mathbb{C}^d}(x, r(x)),$$

one can define $\widetilde{f}$ on $\widetilde{U}$ as the limit of the series above. Then $(\widetilde{f}, \widetilde{U})$ is a holomorphic extension of (f, U).

From now on, we will only use the term "holomorphic extension" for extensions whose domains are contained in the set $\widetilde{U}$ constructed in Proposition 7.1.5. In particular, the function $\widetilde{f}$ is unique up to restriction of its domain.

Proposition 7.1.6. *Let U and V be open sets of $\mathbb{R}^m$ and let $f : U \mapsto V$ be a real-analytic (local) diffeomorphism, then $\widetilde{f}$ is a (local) biholomorphism up to restriction of the domain.*

Proof. On the extended domain $\widetilde{U}$ one has

$$\widetilde{(df)} = \partial \widetilde{f},$$

so that, if $\det(df)$ does not vanish on U, then $\det(\partial \widetilde{f})$ does not vanish on a neighbourhood of U in $\widetilde{U}$; if moreover f is is a global diffeomorphism, that is, if f is injective on U, then $\widetilde{f}$ is injective on a neighbourhood of U in $\widetilde{U}$, which concludes the proof. □

7.1.3 Extensions of manifolds

Proposition 7.1.6 allows us to extend real-analytic manifolds into complex manifolds.

Proposition 7.1.7. *Let M be a real-analytic manifold. There is a complex manifold $(\widetilde{M}, J_e)$ with boundary, such that M is a totally real submanifold of $\widetilde{M}$. Then $\widetilde{M}$ is called a* holomorphic extension *of M.*

In this setting, "totally real" means that

$$\forall x \in M, T_x M \cap J_e(T_x M) = \{0\}.$$

Proof. The proof consists in extending all charts of M in the complex space; the standard complex structure J_{st} of every chart is preserved by the change of charts, which are biholomorphic by construction. This gives the complex structure J_e of $\widetilde{M}$; see [WB59], Proposition 1 for details.

By construction, in the local charts above, the submanifold M of $\widetilde{M}$ is mapped to $\mathbb{R}^{\dim(M)}$, which is totally real for the standard complex structure. Hence, M is totally real in $\widetilde{M}$. □

The extension of real-analytic manifolds is naturally associated with an extension of their real-analytic functions.

Proposition 7.1.8. *Let f be a real-analytic function on a real-analytic manifold M. Then there exists a holomorphic function $\widetilde{f}$ on a holomorphic extension $\widetilde{M}$ of M such that $\widetilde{f}|_M = f$.*

Proof. Any real-analytic function on M can be extended on a holomorphic extension $\widetilde{M}$ by extending the domain of its power series as in Proposition 7.1.5.

□

In this Part II we will frequently extend real-analytic functions on holomorphic manifolds. We introduce a convenient notation to this end. Locally, a real-analytic function f on a complex manifold of dimension d can be written as

$$f : z \mapsto \sum_{\nu,\rho\in\mathbb{N}^d} c_{\nu,\rho} z^\nu \overline{z}^\rho.$$

As the function f is not holomorphic, we specifically write $f(z,\overline{z})$. There is then a natural notion of an extension

$$\widetilde{f} : (z,w) \mapsto \sum_{\nu,\rho\in\mathbb{N}^d} c_{\nu,\rho} z^\nu w^\rho.$$

This function is holomorphic on a neighbourhood of 0 in $\mathbb{C}^{2d}$. It coincides with $\widetilde{f}$, but the totally real manifold of interest is not $\{\Im(z) = 0\}$ anymore but rather $\{(z,w), w = \overline{z}\}$.

Let M be a complex manifold; using the convention above let us treat local charts for M and its holomorphic extension $\widetilde{M}$. A change of charts in M is a biholomorphism ϕ which, in the convention above, depends only on z as a function on $\widetilde{M}$. The extended biholomorphism $\widetilde{\phi}$ constructed in the previous subsection can be written as

$$(z,w) \mapsto (\phi(z), \overline{\phi(\overline{w})}).$$

Gluing open sets along the charts $\overline{\phi}$ (defined by $\overline{\phi}(z) = \overline{\phi(\overline{z})}$) yields a manifold $\overline{M}$, and there is a natural identification $M \ni z \mapsto \overline{z} \in \overline{M}$, so that $\overline{M}$ is simply M with reversed complex structure.

The expression of $\widetilde{\phi}$ above yields

$$\widetilde{M} = M \times \overline{M},$$

and M sits in $\widetilde{M}$ as the totally real submanifold

$$\{(z,w) \in M \times \overline{M}, \overline{z} = w\}.$$

This copy of M is said to be the codiagonal of $M \times \overline{M}$.

Any real-analytic function on M can be extended as a holomorphic function in a neighbourhood of the codiagonal of $\widetilde{M}$. If the function was holomorphic (on a small open set of M) to begin with, then its extension depends only on the first variable (on a small open set of $M \times \overline{M}$).

7.1.4 Analytic functional spaces

In this subsection we derive a few tools about the study of holomorphic functions near a compact totally real set. We first fix a notion of convenient open sets on which our analysis can take place.

Definition 7.1.9. A *domain* of $\mathbb{R}^d$ is an open, relatively compact set U with piecewise smooth boundary.

Recall that a holomorphic function f near zero can be written as

$$f(z) = \sum_{\nu \in \mathbb{N}^d} \frac{f_\nu}{\nu!} z^\nu.$$

Then, in particular $f_\nu = \partial^\nu f(0)$. Since f is holomorphic, the sum above congerges for $|z|$ sufficiently small. In other terms, there exists $r > 0$ and $C > 0$ such that, for every $\nu \in \mathbb{N}^d$, one has

$$|f_\nu| \leq C\nu! r^{|\nu|}.$$

Definition 7.1.10. For $j \in \mathbb{N}$ and f a function on a domain of $\mathbb{R}^d$ of class C^j, we denote by $\nabla^j f$ the function $(\partial^\alpha f(x))_{|\alpha|=j}$, which maps U to $\mathbb{R}^{\binom{j+d-1}{d-1}}$. For $n \in \mathbb{N}$ and $v \in \mathbb{R}^n$, we denote $\|v\|_{\ell^1} = \sum_{j=1}^n |v_1| + \ldots + |v_n|$.

Let $m \in \mathbb{N}$ and $r > 0$. Let U be a domain in $\mathbb{R}^d$. The space $H(m, r, U)$ is defined as the set of real-analytic functions on U such that there exists a constant C satisfying, for every $j \in \mathbb{N}$,

$$\sup_{x \in U} \|\nabla^j f(x)\|_{\ell^1} \leq \frac{C r^j j!}{(j+1)^m}.$$

The space $H(m, r, U)$ is a Banach space for the norm $\|\cdot\|_{H(m,r,U)}$ defined as the smallest constant C such that the inequality above is true for every j.

Such functions can be extended to a neighbourhood of U in $\mathbb{C}^d$, with imaginary part bounded by r^{-1} (and by the distance to the boundary of U). The spaces $H(m, r, U)$ are compactly embedded in each other for the lexicographic order on $(r, -m)$: if either $r < r'$ or $r = r', m > m'$, then

$$H(m, r, U) \subset H(m', r', U).$$

Introducing a parameter m will allow us to control polynomial quantities which appear when one manipulates these holomorphic function spaces, using Lemmas 7.1.12 and 7.2.7. They correspond to a regularity condition at the boundary of a maximal holomorphic extension: for instance, the function $x \mapsto x \log(x)$ belongs to $H(1, 1, (1/2, 3/2))$ but not to $H(m, 1, (1/2, 3/2))$ for $m > 1$.

It will be useful in the course of Part II to consider various analytic norms for the same function while maintaining a fixed norm. The definition of the spaces $H(m, r, U)$ immediately imply the following fact.

Proposition 7.1.11. *Let $m_0 \in \mathbb{N}$ and ,$r_0 > 0$. Let U be a domain in $\mathbb{R}^d$. Let $f \in H(m_0, r_0, U)$. Then, for all $m \geq m_0$ and $r \geq r_0 2^{m-m_0}$, one has $f \in H(m, r, U)$ with*

$$\|f\|_{H(m,r,U)} \leq \|f\|_{H(m_0,r_0,U)}.$$

The following lemma will be used several times in what follows.

Lemma 7.1.12. *Let $d \in \mathbb{N}$. There exists $C > 0$ such that, for any $j \in \mathbb{N}$, for any $m \geq \max(d+2, 2(d+1))$, one has*

$$\sum_{i=0}^{j} \frac{\min(i+1, j-i+1)^d (j+1)^m}{(i+1)^m (j-i+1)^m} \leq 2 + C\frac{3^m}{4^m}.$$

Proof. If $j = 1$ then this sum is exactly 2. We now suppose $j \geq 2$.

let us first prove that, if $1 \leq i \leq j-1$ and $m \geq d$, then

$$\frac{\min(i+1, j-i+1)^d (j+1)^m}{(i+1)^m (j-i+1)^m} \leq 2^d \frac{3^m}{4^m}.$$

Since $x \mapsto -\log(x)$ is convex on $(0, +\infty)$, the function of i above is log-convex on $[1, j/2]$ as well as on $[j/2, j-1]$. By symmetry, it is then sufficient to prove the bound above for $i = 1$ and $i = j/2$.

For $i = 1$, since $j \geq 2$ one can bound

$$\frac{2^d (j+1)^m}{2^m j^m} = 2^d 2^{-m} \left(\frac{j+1}{j}\right)^m \leq 2^d \frac{3^m}{4^m}.$$

For $i = j/2$ the expression becomes

$$2^{-d} \left(\frac{4(j+1)}{(j+2)(j+2)}\right)^m \leq 2^{-d} \frac{3^m}{4^m}.$$

We are now ready to prove the claim. Let us decompose the sum into

$$2 + 2\sum_{i=1}^{\lfloor j/3 \rfloor} \frac{(i+1)^d (j+1)^m}{(i+1)^m (j-i+1)^m} + \sum_{i=\lfloor j/3 \rfloor + 1}^{\lceil 2j/3 \rceil - 1} \frac{(i+1)^d (j+1)^m}{(i+1)^m (j-i+1)^m}.$$

1. If $j - i \geq \frac{2j}{3}$ then
$$\frac{(j+1)^m}{(j-i+1)^m} \leq \frac{3^m}{2^m}.$$
Hence, the sum
$$2\sum_{i=1}^{\lfloor j/3 \rfloor} \frac{(i+1)^d (j+1)^m}{(i+1)^m (j-i+1)^m}$$
is smaller than
$$2 \cdot \frac{3^m}{2^m} \sum_{i=1}^{\lfloor j/3 \rfloor} \frac{1}{(i+1)^{m-d}} \leq 2 \cdot \frac{3^m}{2^m} (\zeta(m-d) - 1),$$
where ζ denotes the Riemann zeta function. If $m - d \geq 2$ one has
$$\zeta(m-d) \leq 1 + 3 \cdot 2^{-(m-d)}.$$
Hence, this sum is smaller than $6 \cdot 2^d \frac{3^m}{4^m}$.

2. The sum
$$\sum_{i=\lfloor j/3\rfloor+1}^{\lceil 2j/3\rceil-1} \frac{(i+1)^d(j+1)^m}{(i+1)^m(j-i+1)^m}$$
is smaller than
$$2\frac{(9/4)^m(j+1)^{d+1}}{(j+1)^m},$$
since for each index i between the bounds one has
$$\frac{(j+1)^m}{(i+1)^m(j-i+1)^m} \leq \frac{(j+1)^m}{(2(j+1)/3)^m(2(j+1)/3)^m} \leq \frac{(9/4)^m}{(j+1)^m}.$$
Suppose $m \geq 2(d+1)$, so that
$$2\frac{(9/4)^m(j+1)^{d+1}}{(j+1)^m} \leq 2\frac{(9/4)^m}{(\sqrt{j+1})^m}.$$
Hence, if $j \geq 10$ then this sum is smaller than $2 \cdot \frac{3^m}{4^m}$. In the other case we have at most 4 terms, each of them smaller than $2^d\dfrac{3^m}{4^m}$.

The total sum is then controlled by
$$2 + \left(10 \cdot 2^d\right)\frac{3^m}{4^m},$$
hence the claim. □

Analytic function classes form an algebra and nonvanishing functions can be inverted:

Proposition 7.1.13. *There exists $C > 0$ such that the following is true. Let $m \geq 2$. Let $r > 0$ and let U be a domain in $\mathbb{R}^n$. Let $f, g \in H(m, r, U)$. Then $fg \in H(m, r, U)$, and*
$$\|fg\|_{H(m,r,U)} \leq C\|f\|_{H(m,r,U)}\|g\|_{H(m,r,U)}.$$
The constant C is universal.

If f is bounded away from zero on U, then $f^{-1} \in H(m, r, U)$, with
$$\|f^{-1}\|_{H(m,r,U)} \leq \frac{\|f\|_{H(m,r,U)}}{\inf_U(|f|)^2}.$$

Proof. Let $f, g \in H(m, r, U)$ and $j \in \mathbb{N}$. Then
$$\sum_{|\alpha|=j} |\partial^\alpha(fg)| \leq \sum_{|\beta+\gamma|=j} \binom{\beta+\gamma}{\beta} |\partial^\beta f|\,|\partial^\gamma g|$$
By Lemma 7.4.2, one has, for every β and γ such that $|\beta+\gamma| = j$,
$$\binom{\beta+\gamma}{\beta} \leq \binom{|\beta+\gamma|}{|\beta|} = \binom{j}{|\beta|}.$$

Hence,

$$\sum_{|\alpha|=j} |\partial^\alpha(fg)| \leq \sum_{i=0}^{|j|} \binom{j}{i} \|\nabla^i f\|_{\ell^1} \|\nabla^{|\alpha|-i} g\|_{\ell^1},$$

so that, for any $j \geq 0$, one has

$$\|\nabla^j(fg)\|_{\ell^1} \leq \|f\|_{H(m,r,U)} \|g\|_{H(m,r,U)} \frac{r^j j!}{(j+1)^m} \sum_{i=0}^{j} \binom{j}{i}^{-1} \binom{j}{i} \frac{(j+1)^m}{(i+1)^m (j-i+1)^m}.$$

Hence,

$$\|\nabla^j(fg)\|_{\ell^1} \leq \|f\|_{H(m,r,U)} \|g\|_{H(m,r,U)} \frac{r^j j!}{(j+1)^m} \sum_{i=0}^{j} \frac{(j+1)^m}{(i+1)^m (j-i+1)^m}.$$

Let us use Lemma 7.1.12 with $d = 0$. If $m \geq 2$, this quantity is bounded independently of j and m, so that

$$\|\nabla^j(fg)\|_{\ell^1} \leq C \|f\|_{H(m,r,U)} \|g\|_{H(m,r,U)} \frac{r^j j!}{(j+1)^m}.$$

This concludes the first part of the proof.

Let now $f \in H(m,r,U)$ which does is bounded away from zero on U. We introduce the modified product $f \cdot g = \frac{fg}{C}$, for which $H(m,r,U)$ is a Banach algebra.

First, $|f|^2$ is real-valued and strictly positive; moreover $|f|^2 = f\overline{f} \in H(m,r,U)$ and, by the property above,

$$\||f|^2\|_{H(m,r,U)} \leq C \|f\|^2_{H(m,r,U)}.$$

Let $g = \frac{|f|^2}{2\||f|^2\|_{H(m,r,U)}}$. Then

$$\|1-g\|_{H(m,r,U)} \leq 1 - \frac{\inf_U(|f|^2)}{2\||f|^2\|_{H(m,r,U)}} < 1.$$

In particular, $g = 1 - (1-g)$ so that, letting h be such that $g \cdot h = 1$, one has

$$h = \sum_{k=0}^{+\infty} (1-g)^{\cdot k}.$$

Hence, one can control

$$\|h\|_{H(m,r,U)} \leq \frac{2\||f|^2\|_{H(m,r,U)}}{\inf_U(|f|^2)}.$$

Now $|f|^{-2} = \dfrac{h}{2C\||f|^2\|_{H(m,r,U)}}$ so that

$$\||f|^{-2}\|_{H(m,r,U)} \leq \frac{1}{C \inf_U(|f|^2)}.$$

We now turn to $f^{-1} = \overline{f}|f|^{-2}$, which is controlled as follows:

$$\|f^{-1}\|_{H(m,r,U)} \leq \frac{\|f\|_{H(m,r,U)}}{\inf_U(|f|^2)}.$$

This concludes the proof. □

The spaces $H(r, m, U)$ contain all holomorphic functions.

Proposition 7.1.14. *Let $d \in \mathbb{N}$. For every $T > 0$ we let $P(0, T)$ be the polydisk of center 0 and of radius T in $\mathbb{C}^d$.*

Let f be a holomorphic, bounded function on $P(0, 2T)$, continuous up to the boundary. Then

$$\|f\|_{H(-d,dT^{-1},P(0,T))} \leq C \sup_{P(0,2T)} |f|.$$

Proof. The proof relies on the Cauchy formula. For all $z \in P(0, T)$ and $\nu \in \mathbb{N}^d$, there holds

$$\partial^\nu f(z) = C \int_{|\xi_1|=\ldots=|\xi_d|=2T} \frac{\nu! f(\xi)}{(\xi_1 - z_1)^{\nu_1}(\xi_2 - z_2)^{\nu_2} \ldots (\xi_d - z_d)^{\nu_d}} \mathrm{d}\xi.$$

As $z \in P(0, r)$ and $|\xi_1| = \ldots = |\xi_d| = 2T$, for every $1 \leq i \leq d$ there holds $|\xi_i - z_i| \geq T$, so that

$$\sup_{P(0,T)} |\partial^\nu(f)| \leq CT^{-|\nu|}\nu! \sup_{P(0,2T)} |f|.$$

In particular, since $\nu! \leq |\nu|! d^{|\nu|}$, by summing over ν's with same norm we obtain

$$\sup_{x \in P(0,T)} \|\nabla^j f(x)\|_{\ell^1} \leq C(j+1)^d (dT^{-1})^j j!,$$

hence the claim. □

7.2 Calculus of analytic symbols

In this section we define and study (formal) *analytic symbols*, which we will show to be well suited to the study of stationary phases with complex, real-analytic phases.

We begin with an explicit definition of C^j-norms on compact manifolds.

Definition 7.2.1. Let X be a compact manifold (with smooth boundary). We fix a finite set $(\rho_V)_{V \in \mathcal{V}}$ of local charts on open sets V which cover X.

Let $j \geq 0$. The C^j norm of a function $f : X \mapsto \mathbb{C}$ which is continuously differentiable j times is defined as

$$\|f\|_{C^j(X)} = \max_{V \in \mathcal{V}} \sup_{x \in V} \sum_{|\mu|=j} |\partial^\mu (f \circ \rho_V)(x)|.$$

This definition is adapted to the multiplication of two functions:

Proposition 7.2.2. *Let X be a compact manifold (with smooth boundary) with fixed local charts, and $f, g \in C^j(X, \mathbb{R})$.*

Then $fg \in C^j(X, \mathbb{R})$ with

$$\|fg\|_{C^j(X)} \leq \sum_{i=0}^{j} \binom{j}{i} \|f\|_{C^i(X)} \|g\|_{C^{j-i}(X)}.$$

Proof. One has, in local coordinates,

$$\partial^\mu(fg) = \sum_{\nu\leq\mu} \binom{\mu}{\nu} \partial^\nu f \partial^{\mu-\nu} g,$$

with, by Lemma 7.4.2,

$$\binom{\mu}{\nu} \leq \binom{|\mu|}{|\nu|}.$$

Hence,

$$\begin{aligned}\sum_{|\mu|=j} |\partial^\mu(fg)(x)| &\leq \sum_{|\mu|=j}\sum_{\nu\leq\mu} \binom{j}{|\nu|} |\partial^\nu f(x)||\partial^{\mu-\nu} g| \\ &= \sum_{i=0}^{j} \binom{j}{i} \sum_{|\nu|=i} |\partial^\nu f| \left(\sum_{|\mu|=j,\nu\leq\mu} |\partial^{\mu-\nu} g| \right) \\ &= \sum_{i=0}^{j} \binom{j}{i} \left(\sum_{|\nu|=i} |\partial^\nu f| \right) \left(\sum_{|\rho|=j-i} |\partial^\rho g| \right),\end{aligned}$$

hence the claim. □

Using the convention above, let us generalise Definition 7.1.10, in order to define analytic symbols.

Definition 7.2.3. Let X be a compact manifold (with boundary), with a fixed set of covering local charts.

Let r, R, m be positive real numbers. The space of analytic symbols $S_m^{r,R}(X)$ consists of sequences $(a_k)_{k\geq 0}$ of real-analytic functions on X, such that there exists $C \geq 0$ such that, for every $j \geq 0, k \geq 0$, one has

$$\|a_k\|_{C^j(X)} \leq C \frac{r^j R^k (j+k)!}{(j+k+1)^m}.$$

The norm of an element $a \in S_m^{r,R}(X)$ is defined as the smallest C as above; then $S_m^{r,R}(X)$ is a Banach space.

We are interested in symbols which have an expansion in increasing powers of the semiclassical parameter. We will use the term "symbols" while, in the usual semiclassical vocabulary, we are dealing with formal symbols to which we associate classical symbols by a summation process in Proposition 7.2.6.

As for the analytic function classes $H(m, r, U)$ of Definition 7.1.10, the spaces $S_m^{r,R}(X)$ are included in each other for a lexicographic order, and the constants of injection are controlled as follows:

Proposition 7.2.4. *Let X be a compact manifold (with boundary) with a fixed finite set of covering charts. Let r_0, R_0, m_0 positive. Let $f \in S_{m_0}^{r_0,R_0}(X)$. For every $m \geq m_0$, for every $r \geq r_0 2^{m-m_0}$ and $R \geq R_0 2^{m-m_0}$, one has $f \in S_m^{r,R}$ with*

$$\|f\|_{S_m^{r,R}(X)} \leq \|f\|_{S_{m_0}^{r_0,R_0}(X)}.$$

The notion of sum of a formal series in N^{-1} is well-defined up to $O(N^{-\infty})$, by a process known as *Borel summation*. In a similar but more explicit way, formal series corresponding to analytic symbols can be summed up to an exponentially small error.

Definition 7.2.5. Let X be a compact Riemannian manifold (with boundary) and let $f \in S_m^{r,R}(X)$. Let $c_R = \frac{e}{3R}$. The *summation* of f is defined as

$$X \times \mathbb{N} \ni (x, N) \mapsto f(N)(x) = \sum_{k=0}^{c_R N} N^{-k} f(x).$$

Proposition 7.2.6. *Let X be a compact Riemannian manifold with boundary and let $f \in S_m^{r,R}(X)$. Let $c_R = \frac{e}{3R}$. Then*

1. *The function $f(N)$ is bounded on X uniformly for $N \in \mathbb{N}$.*
2. *For every $0 < c_1 < c_R$, there exists $c_2 > 0$ such that*

$$\sup_{x \in X} \left| \sum_{k=c_1 N}^{c_R N} N^{-k} f_k(x) \right| = O(e^{-c_2 N}).$$

Proof.

1. Since
$$\sup_{x \in X} |f_k(x)| \leq \|f\|_{S_m^{r,R}(X)} R^k k!,$$
it remains to control
$$\sum_{k=0}^{c_R N} N^{-k} R^k k!.$$
In this series, the first term is 1, and the ratio between two consecutive terms is
$$\frac{N^{-k} R^k k!}{N^{-k+1} R^{k-1} (k-1)!} = \frac{Rk}{N} \leq R c_R = \frac{e}{3} < 1.$$
Hence,
$$\sup_{x \in X} |f(x, N)| \leq \|f\|_{S_m^{r,R}(X)} \sum_{k=0}^{c_R N} (e/3)^k \leq \|f\|_{S_m^{r,R}(X)} \frac{3}{3-e}.$$
2. The claim reduces to a control on
$$\sum_{k=c_1 N}^{c_R N} N^{-k} R^k k!.$$
In this series, on which each term is smaller than $(e/3)^k$, the first term is controlled by
$$(e/3)^{c_1 N} = \exp(c' \log(e/3) N).$$
Hence the claim, with $c_2 = c_1 \log(e/3)$.

□

From the second point of Proposition 7.2.6, we see that the constant $c_R = \frac{e}{3R}$ is quite arbitrary (using the Stirling formula to control factorials, one could in fact consider any constant smaller than $\frac{e}{R}$). We use it in Definition 7.2.5 to avoid dealing with equivalence classes of sequences whose difference is $O(e^{-c'N})$ for some c', as in [Sjö82].

Before studying further the space $S_m^{r,R}(X)$, let us generalize Lemma 7.1.12.

Lemma 7.2.7. *Let $d \in \mathbb{N}$ and $n \geq 2$. There exists $C(n,d) > 0$ such that, for any $m \geq \max(d+2, 2(d+n-1))$, for any $\ell \in \mathbb{N}$, one has*

$$\sum_{\substack{i_1 \leq i_2 \leq \dots \leq i_n \\ i_1 + \dots + i_n = \ell}} \frac{(i_{n-1}+1)^d (\ell+1)^m}{(i_1+1)^m \dots (i_n+1)^m} \leq 1 + C\frac{3^m}{4^m}.$$

This is indeed, up to a factor 2, a generalisation of Lemma 7.1.12 which corresponds to the case $n = 2$.

Proof. As before, the case $\ell = 1$ is trivial, so we assume $\ell \geq 2$. The only term in the sum such that $i_{n-1} = 0$ is equal to 1; let us control the sum restricted on $\{i_{n-1} \geq 1\}$. Let us first show that, if $i_{n-1} \geq 1$, then

$$\frac{(i_{n-1}+1)^d (\ell+1)^m}{(i_1+1)^m \dots (i_n+1)^m} \leq (\ell+1)^d \frac{3^m}{4^m}. \tag{19}$$

One has directly $(i_{n-1}+1)^d \leq (\ell+1)^d$.

We are left with

$$\frac{(\ell+1)^m}{(i_1+1)^m \dots (i_n+1)^m},$$

which is a symmetric expression of $(i_1, \dots, i_n)$, log-convex as soon as $m \geq 0$, and which we wish to bound on the symmetrised set

$$\left\{ (i_1, \dots, i_n) \in \mathbb{N}_0^n, \sum_{k=1}^n i_k = \ell, \text{ at least two of them are } \geq 1 \right\}.$$

By Lemma 7.4.4, it is sufficient to control the quantity above at the permutations of $(\ell-1, 1, 0, \dots, 0)$. At each of those points, since $\ell \geq 2$, one has

$$\frac{(\ell+1)^m}{(i_1+1)^m \dots (i_n+1)^m} = \left(\frac{\ell+1}{2\ell}\right)^m \leq \frac{3^m}{4^m}.$$

We are now in position to prove the claim. Let us first restrict our attention to $\{i_1 \geq \frac{\ell+1}{3(n-1)}\}$. There are less than $(\ell+1)^{n-1}$ such terms (since there are less than $(\ell+1)^{n-1}$ terms in total), and each of these terms is smaller than

$$\frac{(\ell+1)^d (\ell+1)^m}{\left(\frac{\ell+1}{3(n-1)}\right)^{mn}} = \frac{(\ell+1)^d (3(n-1))^{mn}}{(\ell+1)^{m(n-1)}}.$$

Hence, this sum is controlled by

$$\frac{(\ell+1)^{n+d-1} (3(n-1))^{mn}}{(\ell+1)^{m(n-1)}}$$

We now consider the sum on $\{i_1 \leq \frac{\ell+1}{3n-1} \leq i_2\}$. There are again less than $(\ell+1)^{n-1}$ such terms, each of them smaller than

$$\frac{(\ell+1)^d(\ell+1)^m}{\left(\frac{\ell+1}{3(n-1)}\right)^{m(n-1)}} = \frac{(\ell+1)^d(3(n-1))^{m(n-1)}}{(\ell+1)^{m(n-2)}}.$$

Thus, this sum is smaller than

$$\frac{(\ell+1)^{n+d-1}(3(n-1))^{m(n-1)}}{(\ell+1)^{m(n-2)}}.$$

Similarly, we are able to control the sum restricted on $\{i_k \leq \frac{\ell+1}{3(n-1)} \leq i_{k+1}\}$, for $k \leq n-2$, by

$$\frac{(\ell+1)^{n+d-1}(3(n-1))^{m(n-k)}}{(\ell+1)^{m(n-k-1)}}.$$

If $m \geq 2(d+n-1)$, then $(\ell+1)^{n+d-1+m} \leq (\ell+1)^{3m/2}$, so that, for any $k \leq n-2$, if $\ell+1 \geq 3n$, one has

$$\begin{aligned}\frac{(\ell+1)^{n+d-1}(3(n-1))^{m(n-k)}}{(\ell+1)^{m(n-k-1)}} &\leq (\ell+1)^{\frac{3m}{2}}\left(\frac{3(n-1)}{\ell+1}\right)^{m(n-k)} \\ &\leq (\ell+1)^{3m/2}\left(\frac{3(n-1)}{\ell+1}\right)^{2m} = \left(\frac{9(n-1)^2}{\sqrt{\ell+1}}\right)^m.\end{aligned}$$

Thus, for ℓ large enough (depending on n), this quantity is smaller than $\frac{3^m}{4^m}$; for l small we have a number of terms bounded by a function of n, each term being smaller than $C(n,d)\frac{3^m}{4^m}$ by (19).

It remains to control the sum restricted on $\{1 \leq i_{n-1} \leq \frac{\ell+1}{3(n-1)}\}$. In this case, $i_n + 1 \geq \frac{2(\ell+1)}{3}$, so that the sum is smaller than

$$\begin{aligned}\frac{3^m}{2^m} \sum_{\substack{0 \leq i_1 \leq \cdots \leq i_{n-1} \leq \frac{\ell+1}{3(n-1)} \\ i_{n-1} \geq 1}} \frac{(i_{n-1}+1)^d}{(i_1+1)^m(i_2+1)^m \ldots (i_{n-1}+1)^m} \\ \leq \frac{3^m}{2^m}(\zeta(m))^{n-2}(\zeta(m-d)-1).\end{aligned}$$

The Riemann zeta function is decreasing, and if $m \geq d+2$, then

$$\zeta(m-d) \leq 1 + 3 \cdot 2^{-(m-d)},$$

so that the expression above is controlled by $C(n,d)\frac{3^m}{4^m}$. This concludes the proof. □

Analytic symbols behave well with respect to the Cauchy product, which corresponds to the product of their summations.

Proposition 7.2.8. *There exists $C_0 \in \mathbb{R}$ and a function $C : \mathbb{R}^2 \to \mathbb{R}$ such that the following is true.*

Let X be a compact Riemannian manifold (with boundary) and with a fixed finite set of covering charts. Let $r, R \geq 0$ and $m \geq 4$. For $a, b \in S_m^{r,R}(X)$, let us define the Cauchy product of a and b as

$$(a * b)_k = \sum_{i=0}^{k} a_i b_{k-i}.$$

1. *The space $S_m^{r,R}(X)$ is an algebra for this Cauchy product, that is,*

$$\|a * b\|_{S_m^{r,R}} \leq C_0 \|a\|_{S_m^{r,R}} \|b\|_{S_m^{r,R}}.$$

Moreover, there exists $c > 0$ depending only on R such that as $N \to +\infty$, one has

$$(a * b)(N) = a(N)b(N) + O(e^{-cN}).$$

2. *Let r_0, R_0, m_0 positive and $a \in S_{m_0}^{r_0,R_0}(X)$ with a_0 nonvanishing. Then, for every m large enough depending on a, for every $r \geq r_0 2^{m-m_0}, R \geq R_0 2^{m-m_0}$, a is invertible (for the Cauchy product) in $S_m^{r,R}(X)$, and its inverse $a^{\star -1}$ satisfies:*

$$\|a^{*-1}\|_{S_m^{r,R}(X)} \leq C(\|a\|_{S_{m_0}^{r_0,R_0}(X)}, \min(|a|)).$$

Proof.

1. From Proposition 7.2.2, one has, for every $0 \leq i \leq k$ and $j \geq 0$,

$$\|a_i b_{k-i}\|_{C^j} \leq \sum_{\ell=0}^{j} \binom{j}{\ell} \|a_i\|_{C^\ell} \|b_{k-i}\|_{C^{j-\ell}}.$$

In particular,

$$\|(a * b)_k\|_{C^j} \leq \|a\|_{S_m^{r,R}} \|b\|_{S_m^{r,R}} \frac{r^j R^k (j+k)!}{(j+k+1)^m} \sum_{i=0}^{k} \sum_{\ell=0}^{j} \binom{j+k}{i+\ell}^{-1} \binom{j}{\ell} \frac{(j+k+1)^m}{(i+\ell+1)^m (j+k-i-\ell+1)^m}.$$

By Lemma 7.4.1, one has

$$\binom{j}{\ell} \leq \binom{j+i}{\ell+i} \leq \binom{j+k}{\ell+i}.$$

This yields

$$\begin{aligned}
&\|(a * b)_k\|_{C^j} \\
&\quad \leq \|a\|_{S_m^{r,R}} \|b\|_{S_m^{r,R}} \frac{r^j R^k (j+k)!}{(j+k+1)^m} \sum_{i=0}^{k} \sum_{\ell=0}^{j} \frac{(j+k+1)^m}{(i+\ell+1)^m (j+k-i-\ell+1)^m} \\
&\leq \|a\|_{S_m^{r,R}} \|b\|_{S_m^{r,R}} \frac{r^j R^k (j+k)!}{(j+k+1)^m} \sum_{i'=0}^{k+j} \frac{\min(i'+1, j+k-i'+1)(j+k+1)^m}{(i'+1)^m (j+k-i'+1)^m}.
\end{aligned}$$

Here, we let $i' = i + \ell$.

We are reduced to Lemma 7.1.12 with $d = 1$. If $m \geq 4$, this sum is smaller than a universal constant C independently of j, k, so that

$$\|a * b\|_{S_m^{r,R}} \leq C\|a\|_{S_m^{r,R}}\|b\|_{S_m^{r,R}}.$$

Let us control the product of the associated analytic series. By Proposition 7.2.6, for some $c > 0$ depending only on R, one has

$$a(N) = \sum_{k=0}^{\frac{eN}{12R}} N^{-k} a_k + O(e^{-cN}),$$

and similar controls for $b(N)$ and $(a \star b)(N)$.

The first $\dfrac{eN}{12R}$ terms of the expansion in decreasing powers of $(a * b)(N)$ and $a(N)b(N)$ then coincide by definition of the Cauchy product. It remains to control

$$\sum_{\frac{eN}{12R} \leq i+j \leq \frac{eN}{6R}} N^{-(i+j)} a_i b_j.$$

From

$$\sup(|a_i b_j|) \leq CR^{i+j} i! j! \leq C(2R)^{i+j}(i+j)!,$$

one has, as in Proposition 7.2.6,

$$\left| \sum_{\frac{eN}{12R} \leq i+j \leq \frac{eN}{6R}} N^{-(i+j)} a_i b_j \right| \leq \sum_{\frac{eN}{12R} \leq i+j \leq \frac{eN}{6R}} N^{-(i+j)} (2R)^{i+j} (i+j)! \leq e^{-cN},$$

hence the claim.

2. The unit element of the Cauchy product is $(1, 0, 0, \ldots)$ which belongs to $S_m^{r,R}(X)$. Let $a \in S_{m_0}^{r_0,R_0}(X)$ be such that a_0 does not vanish on X, and let us try to find b such that $(a * b)_0 = 1$ and $(a * b)_k = 0$ whenever $k \neq 0$.

   The first condition yields $b_0 = a_0^{-1}$, which is a function with real-analytic regularity and same radius as a_0, by Proposition 7.1.13, so that

$$\|b_0\|_{C^j} \leq C_0 \frac{r_0^j j!}{(j+1)^{m_0}}.$$

   In particular, by Lemma 7.1.11, for all $m \geq m_0, r \geq r_0 2^{m-m_0}$, one has

$$\|b_0\|_{C^j} \leq C_0 \frac{r^j j!}{(j+1)^m}.$$

   The coefficients b_k are then determined by induction:

$$b_k = a_0^{-1} \sum_{i=1}^{k} a_i b_{k-i} = b_0 \sum_{i=1}^{k} a_i b_{k-i}.$$

Let us control $\|b\|_{S_m^{r,R}(X)}$ by $\|a\|_{S_m^{r,R}(X)}$ by induction, for some r, R, m which will be chosen later.

We now proceed by induction on k. Suppose that, for all $\ell \leq k-1$ and $j \geq 0$, one has

$$\|b_\ell\|_{C^j} \leq C_b \frac{r^j R^\ell (j+\ell)!}{(j+ell+1)^m},$$

We wish to prove the same control for $\ell = k$. The constant C_b will be chosen later.

By induction hypothesis,

$$\begin{aligned}
\|b_k\|_{C^j} &\leq C_0 C_b \|a\|_{S_m^{r,R}} \sum_{j_1=0}^{j} \sum_{i=1}^{k} \sum_{j_2=0}^{j-j_1} \binom{j}{j_1, j_2} \frac{r^{j_1} j_1!}{(j_1+1)^m} \\
&\qquad \times \frac{r^{j_2} R^i (j_2+i)! r^{j-j_1-j_2} R^{k-i} (j-j_1-j_2+k-i)!}{(i+j_2+1)^m (j-j_1-j_2+k-i+1)^m} \\
&\leq C_b C_0 \|a\|_{S_m^{r,R}} \frac{r^j R^k (j+k)!}{(j+k+1)^m} \sum_{j_1=0}^{j} \sum_{i=1}^{k} \sum_{j_2=0}^{j-j_1} \binom{j}{j_1, j_2} \binom{j+k}{j_1, j_2+i}^{-1} \\
&\qquad \times \frac{(j+k+1)^m}{(j_1+1)^m (j_2+i+1)^m (j-j_1-j_2+k-i+1)^m}.
\end{aligned}$$

Let us prove that, for every i, j, j_1, j_2, k in the range above, one has

$$\binom{j+k}{j_1, j_2+i} \geq \binom{j}{j_1, j_2}.$$

There holds

$$\binom{j+1}{j_1, j_2+1} = \binom{j}{j_1, j_2} \frac{j+1}{j-j_1-j_2} \geq \binom{j}{j_1, j_2},$$

so that

$$\binom{j+k}{j_1, j_2+i} \geq \binom{j+i}{j_1, j_2+i} \geq \binom{j}{j_1, j_2}.$$

Hence,

$$\begin{aligned}
\|b_k\|_{C^j} &\leq C_b C_0 \|a\|_{S_m^{r,R}} \frac{r^j R^k (j+k)!}{(j+k+1)^m} \\
&\qquad \times \sum_{j_1=0}^{j} \sum_{i=1}^{k} \sum_{j_2=0}^{j-j_1} \frac{(j+k+1)^m}{(j_1+1)^m (j_2+i+1)^m (j-j_1-j_2+k-i+1)^m} \\
&\leq C_b C_0 \|a\|_{S_m^{r,R}} \frac{r^j R^k (j+k)!}{(j+k+1)^m} \sum_{\substack{i_1 \geq 1 \\ j_1+i_1+i_2=j+k}} \frac{\min(i_1+1, i_2+1)(j+k+1)^m}{(j_1+1)^m (i_1+1)^m (i_2+1)^m}.
\end{aligned}$$

From Lemma 7.2.7 with $n = 3$ and $d = 1$, the sum

$$\sum_{\substack{j_1+i_1+i_2=j+k \\ i_1 \geq 1}} \frac{\min(i_1+1, i_2+1)(j+k+1)^m}{(j_1+1)^m (i_1+1)^m (i_2+1)^m}$$

is bounded independently of j and k for $m \geq 6$. However this control is not enough since it yields a constant in front of $\dfrac{r^j R^k (j+k)!}{(j+k+1)^m}$ which is a priori $CC_0C_b\|a\|_{S_m^{r,R}} \geq C_b$.

However, the only term in this expansion which contributes as 1 is

$$j_1 = 0, i_1 = k + j, i_2 = 0,$$

which corresponds to $j_1 = 0, i = k, j_2 = j$. One can control this term independently of C_b since

$$|a_0^{-1}|\|a_k\|_{C^j}|b_0| \leq C_0^2 \frac{r^j R^k (j+k)!}{(j+k+1)^m}.$$

The sum over all other terms is smaller than $CC_bC_0\|a\|_{S_m^{r,R}}(3/4)^m$ for some C, by Lemma 7.2.7.

We can conclude: if m is large with respect to $\|a\|_{S_m^{r,R}}$ (which can be done using Proposition 7.2.4 by setting $r \geq r_0 2^{m-m_0}$ and $R \geq R_0 2^{m-m_0}$) and if $C_b \geq 2C_0^2$ (recall from Proposition 7.1.13 that $C_0^2 = \min(|a|)^{-4}\|a\|^2_{S_m^{r,R}}$), one has, by induction,

$$\|b_k\|_{C^j} \leq C_b \frac{r^j R^k (j+k)!}{(j+k+1)^m}.$$

This concludes the proof.

□

Remark 7.2.9. The method of proof for Proposition 7.2.8 will be used again in Chapters 8 and 9. This method consists in an induction, in which quotients of factorials must be bounded; this reduces the control by induction to Lemma 7.2.7. Constants which appear must be carefully chosen so that the induction can proceed. In particular, given a fixed object in an analytic class, it will useful to change the parameters (typically m, r, R) in its control, while maintaining a fixed norm.

The classes $H(m, r, V)$ of real-analytic functions introduced in Section 7.1 contain all holomorphic functions. In a similar manner, the symbol classes $S_m^{r,R}$ contain all classical analytic symbols in the sense of Sjöstrand [Sjö82]:

Proposition 7.2.10. *Let U be an open set of $\mathbb{C}^n$ and let $a = (a_k)_{k\geq 0}$ be a sequence of bounded holomorphic functions on U such that there exists $C > 0$ and $R > 0$ satisfying, for all $k \geq 0$,*

$$\sup_U |a_k| \leq CR^k k!.$$

Then for every $V \subset\subset U$ there exists $r > 0$ such that $a \in S_0^{r,R}(V)$.

In particular, given an analytic symbol a and a biholomorphism κ, then $a \circ \kappa$ is an analytic symbol.

Proof. By Proposition 7.1.14, there exists $C_1 > 0$ and $r > 0$ such that, for every $k \geq 0$, one has $a_k \in H(r, 0, V)$ with

$$\|a_k\|_{H(0,r,V)} \leq C_1 \sup_U |a_k|.$$

In other terms, for every $k \geq 0, j \geq 0$, one has

$$\|a_k\|_{C^j(V)} \leq C_1 C r^j R^k j! k! \leq C_1 C r^j R^k (j+k)!.$$

Hence $a \in S_0^{r,R}(V)$. □

7.3 Complex stationary phase lemma

In this subsection we present the tools of stationary phase in the context of real-analytic regularity, as developed by Sjöstrand [Sjö82]. We wish to study integrals of the form

$$\int_\Omega e^{N\Phi(x)} a(x) \mathrm{d}x,$$

as $N \to +\infty$. If Φ is purely imaginary, then by integration by parts, this integral is $O(N^{-\infty})$ away from the points where $d\Phi$ vanishes. At such points, if Φ is Morse, a change of variables leads to the usual case where Φ is quadratic nondegenerate; then there is a full expansion of the integral in decreasing powers of N. If Φ is real-valued, a similar analysis (Laplace method) yields a related expansion.

On one hand, we wish to study such an integral, in the more general case where $i\Phi$ is complex-valued. On the other hand we want to improve the $O(N^{-\infty})$ estimates into $O(e^{-cN})$. This is done via a complex change of variables; to this end we have to impose real-analytic regularity on Φ and a.

Let us introduce a notion of analytic phase, which generalises positive phase functions as appearing in [Sjö82].

Definition 7.3.1. Let $d, k \in \mathbb{N}$. Let Ω be a domain of $\mathbb{R}^d$. Let Φ be a real-analytic function on $\Omega \times \mathbb{R}^k$. For each $\lambda \in \mathbb{R}^k$ we let $\Phi_\lambda = \Phi(\cdot, \lambda)$. Then Φ is said to be an *analytic phase* on Ω under the following conditions.

- There exists an open set $\widetilde{\Omega} \subset \mathbb{C}^d$ such that, for every $\lambda \in \mathbb{R}^k$, the function Φ_λ extends to a holomorphic function $\widetilde{\Phi}_\lambda$ on $\widetilde{\Omega}$.
- For every $\lambda \in \mathbb{R}^k$, there exists exactly one point $\tilde{x}_\lambda \in \widetilde{\Omega}$ such that $d\widetilde{\Phi}_\lambda(\tilde{x}_\lambda) = 0$; this critical point is non-degenerate. There holds $\widetilde{\Phi}_\lambda(\widetilde{x}_\lambda) = 0$.
- One has $\widetilde{x}_0 = 0$ and moreover $\Re\Phi_0 < 0$ on $\Omega \setminus \{0\}$.

Under the conditions of Definition 7.3.1, the function $\lambda \mapsto \widetilde{x}_\lambda$ is real-analytic. A first change of integration paths leads to the usual definition of positive phase functions [Sjö82]. That is, one can assume, without loss of generality, that $\widetilde{x}_\lambda = 0$.

Proposition 7.3.2. *Let Φ_λ be an analytic phase in the sense of Definition 7.3.1, and $\widetilde{\Phi}_\lambda$ its extension on the domain $\widetilde{\Omega}$. We let $\Omega_\lambda = \left(\mathbb{R}^d + \widetilde{x}_\lambda\right) \cap \widetilde{\Omega}$. There exists $c' > 0, C > 0$, and a small neighbourhood $\Lambda \subset \mathbb{R}^k$ of zero, such that the following is true.*

Let a_λ be a family of real-analytic functions on Ω which extend to holomorphic functions $\tilde{a}_\lambda$ on $\widetilde{\Omega}$. Then, for every $\lambda \in \Lambda$ and every $N \in \mathbb{N}$,

$$\left| \int_\Omega e^{N\Phi_\lambda} a_\lambda - \int_{\Omega_\lambda} e^{N\widetilde{\Phi}_\lambda} \tilde{a}_\lambda \right| \leq C \sup_{\widetilde{\Omega}} |\widetilde{a}_\lambda| e^{-c'N}.$$

Moreover, for $\lambda \in \Lambda$, one has $\Re\widetilde{\Phi}_\lambda < 0$ on $\Omega_\lambda \setminus \{\widetilde{x}_\lambda\}$.

Proof. The proof proceeds in two steps. In the first step, we apply the Morse lemma and show that, for some analytic symbol b_λ, one has

$$\int_\Omega e^{N\Phi_\lambda} a_\lambda = \int_\Omega e^{-N|y|^2} b_\lambda(y) \mathrm{d}y + O(e^{-cN}).$$

In the second step, we provide an expansion, up to an exponentially small error, for the right-hand term above. We let V be an open subset of Ω containing 0. Then, for every $\lambda \in \mathbb{R}^k$, either $\widetilde{x}_\lambda \in \mathbb{R}^d$, in which case there is nothing to prove, or the set $V + [0,1]\widetilde{x}_\lambda$ has real dimension $d+1$. In the latter case, the boundary of $V + [0,1]\widetilde{x}_\lambda$ can be decomposed as follows:

$$\partial(V + [0,1]\widetilde{x}_\lambda) = V \cup (V + \widetilde{x}_\lambda) \cup (\partial V + [0,1]\widetilde{x}_\lambda).$$

By hypothesis, there exists $c' > 0$ such that $\Re\Phi_0 < -2c'$ on ∂V. By continuity (and since $\widetilde{x}_\lambda$ has real-analytic dependence on λ), for λ in a small neighbourhood Λ of zero, one has $V + [0,1]\widetilde{x}_\lambda \subset \widetilde{\Omega}$ and $\Re\widetilde{\Phi}_\lambda < -c'$ on $\partial V + [0,1]\widetilde{x}_\lambda$.

Then, the contour integral of $e^{N\widetilde{\Phi}_\lambda} a_\lambda$ on $\partial(V + [0,1]\widetilde{x}_\lambda)$ is zero, so that

$$\left| \int_V e^{N\Phi_\lambda} a_\lambda - \int_{V+\widetilde{x}_\lambda} e^{N\widetilde{\Phi}_\lambda} \widetilde{a}_\lambda \right| \leq C \sup_{\widetilde{\Omega}} |\widetilde{a}_\lambda| e^{-c'N}.$$

Since $\Omega \setminus V \in U$, the first integral is exponentially close to the integral over Ω. In the same way, one can replace the second integral by an integral over $\widetilde{\Omega}_\lambda$. This ends the proof. □

We are now in position to prove an analytic stationary phase Lemma.

Proposition 7.3.3. *Let Φ be an analytic phase on a domain Ω. There exists $c > 0$, $c' > 0$, $C' > 0$, a neighbourhood $\Lambda \subset \mathbb{R}^k$ of zero, and a biholomorphism $\widetilde{\kappa}_\lambda$, with real-analytic dependence[2] on $\lambda \in \Lambda$, such that the associated Laplace operator*

$$\widetilde{\Delta}(\lambda) = \kappa_\lambda \circ \Delta \circ \kappa_\lambda^{-1}$$

satisfies, for every function a_λ holomorphic on $\widetilde{\Omega}$:

$$\int_\Omega e^{N\Phi_\lambda} a_\lambda = \sum_{k=0}^{c\lambda} \left(k! N^{\frac{d}{2}+k}\right)^{-1} \widetilde{\Delta}(\lambda)^k (\widetilde{a}_\lambda J_\lambda^{-1})(\widetilde{x}_\lambda) + R_\lambda(N),$$

where, uniformly in $\lambda \in \Lambda$,

$$|R_\lambda(N)| \leq C e^{-c'N} \sup_{\widetilde{\Omega}} |\widetilde{a}_\lambda|,$$

and J_λ is the Jacobian determinant associated with the change of variables κ_λ.

Proof. For $y = (y_1, \ldots, y_d) \in \mathbb{C}^d$ we denote $y \cdot y = \sum_{i=1}^d y_i^2$. If in particular $y \in \mathbb{R}^d$, we denote

$$|y| = \sqrt{y \cdot y} = |y|_{\ell^2} = (y_1^2 + \ldots + y_d^2)^{\frac{1}{2}}.$$

By Proposition 7.3.2, without loss of generality $\widetilde{x}_\lambda = 0$ so that $\Re(\widetilde{\Phi}_\lambda) < 0$ on $\Omega \setminus \{0\}$.

The holomorphic Morse lemma [Ste16] states that there is a biholomorphism κ_λ of neighbourhoods of 0 in $\mathbb{C}^d$, with real-analytic dependence on λ, such that, for every x in the domain of κ,

$$\widetilde{\Phi}_\lambda(\kappa_\lambda(x), \kappa_\lambda(x)) = -\kappa_\lambda(x) \cdot \kappa_\lambda(x).$$

2 By this we mean: a real-analytic function κ on $U \times \Lambda$, where U is a neighbourhood of 0 in $\widetilde{\Omega}$, holomorphic in the first variable, such that there exists σ with the same properties, satisfying $\sigma(\kappa(x,\lambda),\lambda) = \kappa(\sigma(x,\lambda),\lambda) = x$ for all $(x,\lambda) \in U \times \Lambda$.

Let V be a small neighbourhood of 0 in $\mathbb{C}^d$ such that κ_λ is well-defined on V, and let $V_\mathbb{R} = V \cap \mathbb{R}^d$. Since $\Re(\widetilde{\Phi}_\lambda(x)) < 0$ for $0 \neq x \in \Omega$, uniformly in λ close to 0, one can restrict the domain of integration: for some small $c' > 0$ and C depending only on Φ, one has

$$\left| \int_\Omega e^{N\Phi_\lambda} a_\lambda - \int_{V_\mathbb{R}} e^{N\Phi_\lambda} a_\lambda \right| \leq C \sup(|a_\lambda|) e^{-c'N}.$$

Applying the change of variables κ_λ yields

$$\int_{V_\mathbb{R}} e^{N\Phi_\lambda} a_\lambda = \int_{W_\lambda} e^{-Ny\cdot y} (\widetilde{a}_\lambda \circ \kappa_\lambda^{-1})(y) J_\lambda(y) \mathrm{d}y,$$

where $W_\lambda = \kappa_\lambda(V_\mathbb{R})$, and J_λ is the appropriate Jacobian.

We let $b_\lambda = (\widetilde{a}_\lambda \circ \kappa_\lambda^{-1}) J_\lambda$. Then, by Proposition 7.1.14, the function $\widetilde{a}_\lambda \circ \kappa_\lambda^{-1}$, which is bounded and holomorphic on a small open neighbourhood of 0, belongs to some analytic space $H(2, r_1, \kappa_\lambda(V))$ for r_1 large depending only on r and Φ_λ if V is chosen small enough. Without loss of generality, $J_\lambda \in H(2, r_1, \kappa_\lambda(V))$ as well. Then, by Proposition 7.1.13, b_λ belongs to $H(r_1, \kappa_\lambda(V))$, with r_1 depending only on r and Φ_λ, and the norm of b_λ is controlled as follows: there exists C which depends only on $\widetilde{\Phi}_\lambda$ and $\widetilde{\Omega}$ such that

$$\|b\|_{H(r_1, \kappa_\lambda(V))} \leq C \sup_{\widetilde{\Omega}} |\widetilde{a}_\lambda|.$$

The biholomorphism κ_λ does not preserve $\mathbb{R}^d$ (unless Φ_λ is real-valued). We now wish to change contours so that

$$\int_{W_\lambda} e^{-Ny\cdot y} b_\lambda(y) \mathrm{d}y = \int_{V_\mathbb{R}} e^{-Ny\cdot y} b_\lambda(y) \mathrm{d}y + O(e^{-c'N} \sup |b_\lambda|).$$

Consider the following homotopy of functions on $\mathbb{C}^d$:

$$\sigma_t(z) = \Re(z) + (1-t)\Im(z).$$

Then $\sigma_0 = Id$ while σ_1 is the projection on the real locus. If $y \in W_\lambda$ is not zero, then $y \cdot y > 0$, so that $\sigma_t(y) \cdot \sigma_t(y) \geq y \cdot y > 0$. Hence, the set $U \cup_{t \in [0,1]} \sigma_t(W_\lambda)$, of real dimension $d+1$, is contained in $\{y \cdot y > 0\} \cup \{0\}$. Then, since

$$\partial U = W_\lambda \cup \sigma_1(W_\lambda) \cup U'$$

with U' far from zero, and since the contour integral over ∂U is zero, one has, for some $c' > 0$ and $C > 0$ depending only on Φ,

$$\left| \int_{W_\lambda} e^{-Ny\cdot y} b_\lambda(y) \mathrm{d}y - \int_{\sigma_1(W_\lambda)} e^{-Ny\cdot y} b_\lambda(y) \mathrm{d}y \right| \leq C e^{-c'N} \sup_{\widetilde{\Omega}} |b_\lambda|.$$

Applying again a domain restriction, there holds

$$\left| \int_{\sigma_1(W_\lambda)} e^{-Ny\cdot y} b_\lambda(y) \mathrm{d}y - \int_{V_\mathbb{R}} e^{-Ny\cdot y} b_\lambda(y) \mathrm{d}y \right| \leq C e^{-cN} \sup_{\widetilde{\Omega}} |b_\lambda|.$$

To conclude the first part of the proof, for some $C > 0$ and $c' > 0$, there holds

$$\left| \int_\Omega e^{-N\Phi_\lambda(y)} a_\lambda(y) \mathrm{d}y - \int_{V_\mathbb{R}} e^{-Ny\cdot y} b_\lambda(y) \mathrm{d}y \right| \leq C e^{-c'N} \sup_{\widetilde{\Omega}} |b_\lambda|.$$

We now pass to the second step of the proof. Let us prove that, for some $c > 0$ and $c' > 0$, there holds

$$\left| \int_{V_{\mathbb{R}}} e^{-N|y|^2} b_\lambda(y) \mathrm{d}y - N^{-d/2} \sum_{k=0}^{cN} \frac{\Delta^k b_\lambda}{N^k k!}(0) \right| \leq C \|b\|_{H(r_1,V)} e^{-c'N}.$$

Let us first replace b_λ by its Taylor series up to $2cN$:

$$\left| b_\lambda(y) - \sum_{|\nu| \leq 2cN} \frac{b_{\lambda,\nu}}{\nu!} y^\nu \right| \leq \frac{\|b_\lambda\|_{C^{2cN+1}} |y|_{\ell^1}^{2cN+1}}{(2cN+1)!} \leq C r_1^{2cN} |y|^{2cN} \sup_{\widetilde{\Omega}} |\widetilde{a}_\lambda|.$$

The integral of the remainder is then controlled as follows, by the Stirling formula:

$$\begin{aligned}
& C r_1^{2cN} \sup_{\widetilde{\Omega}} |\widetilde{a}_\lambda| \int_{V_{\mathbb{R}}} e^{-N|y|^2} |y|^{2cN} \mathrm{d}y \\
& \leq C r_1^{2cN} \sup_{\widetilde{\Omega}} |\widetilde{a}_\lambda| \int_{\mathbb{R}^d} e^{-N|y|^2} |y|^{2cN+1} \mathrm{d}y \\
& \leq C N^{-\frac{d}{2}-1} r_1^{2cN} N^{-cN} \Gamma(cN + d/2 + 1) \sup_{\widetilde{\Omega}} |\widetilde{a}_\lambda| \\
& \leq C N^{-1} r_1^{2cN} N^{-cN} \Gamma(cN+1) \sup_{\widetilde{\Omega}} |\widetilde{a}_\lambda| \\
& \leq C N^{-1} \exp(cN \log(r_1^2) - cN \log(N) + cN \log(cN) - cN) \sup_{\widetilde{\Omega}} |\widetilde{a}_\lambda| \\
& \leq C N^{-1} \exp(N \log(r_1^2 c/e)) \sup_{\widetilde{\Omega}} |\widetilde{a}_\lambda|.
\end{aligned}$$

Thus, as long as $c < \frac{e}{r_1^2}$, for some $c' > 0$ one has

$$\left| \int_{V_{\mathbb{R}}} e^{-Ny^2} \left(b_\lambda(y) - \sum_{|\nu| \leq 2cN} \frac{b_{\lambda,\nu}}{\nu!} y^\nu \right) \mathrm{d}y \right| = O(e^{-c'N} \sup_{\widetilde{\Omega}} |\widetilde{a}_\lambda|).$$

It remains to estimate, for every $0 \leq j \leq 2cN$, the integral

$$\int_{V_{\mathbb{R}}} e^{-N|y|^2} \sum_{|\nu|=j} \frac{b_{\lambda,\nu}}{\nu!} y^\nu \mathrm{d}y.$$

Let us first show that one can replace the integral over $V_{\mathbb{R}}$ by an integral over $\mathbb{R}^d$, up to an exponentially small error.

One has, as $b_\lambda \in H(0, r_1, V)$ with controlled norm,

$$\sum_{|\nu|=j} |b_{\lambda,\nu}| \leq C r_1^j j! \sup_{\widetilde{\Omega}} |\widetilde{a}_\lambda|.$$

Moreover,

$$|y|^j = (y_1^2 + \ldots + y_d^2)^{j/2} \geq d^{-\frac{j}{2}} (|y_1| + \ldots + |y_d|)^j = d^{-\frac{j}{2}} \sum_{|\nu|=j} \frac{j!}{\nu!} |y|^\nu \geq j! d^{-\frac{j}{2}} \max_{|\nu|=j} \frac{|y|^\nu}{\nu!}.$$

Hence,

$$\left|\sum_{|\nu|=j} \frac{b_{\lambda,\nu}}{\nu!} y^\nu\right| \leq C(\sqrt{d}r_1)^j |y|^j \sup_{\widetilde{\Omega}} |\widetilde{a}_\lambda|.$$

Let $T > 0$ be such that $B(0,T) \subset V_{\mathbb{R}}$. Then

$$\begin{aligned}\left|\int_{\mathbb{R}^d \setminus V_{\mathbb{R}}} e^{-N|y|^2} \sum_{|\nu|=j} \frac{b_{\lambda,\nu}}{\nu!} y^\nu \mathrm{d}y\right| &\leq C(\sqrt{d}r_1)^j \sup_{\widetilde{\Omega}} |\widetilde{a}_\lambda| \int_{T^2}^{+\infty} e^{-Nr} r^{j+d-1} \mathrm{d}r \\ &\leq CN^{-d}(\sqrt{d}r_1)^j N^{-j} \sup_{\widetilde{\Omega}} |\widetilde{a}_\lambda| \int_{NT^2}^{+\infty} e^{-r} r^{j+d-1} \mathrm{d}r\end{aligned}$$

The function $r \mapsto e^{-r/2} r^{j+d-1}$ reaches its maximum at $r = 2(j+d-1)$. If $c < T^2$, then for N large enough $2NT^2 > 2cN + d - 1 \geq j + d - 1$, so that

$$\int_{NT^2}^{+\infty} e^{-r} r^{j+d-1} \mathrm{d}r \leq e^{-NT^2/2} (NT^2)^{j+d-1} \int_{NT^2}^{+\infty} e^{-r/2} \mathrm{d}r \leq Ce^{-NT^2} (NT^2)^{j+d-1}.$$

Hence, for every $N \in \mathbb{N}$,

$$\begin{aligned}\left|\int_{\mathbb{R}^d \setminus V_{\mathbb{R}}} e^{-Ny^2} \sum_{|\nu|=j} \frac{b_{\lambda,\nu}}{\nu!} y^\nu \mathrm{d}y\right| &\leq CN^{-1}(r_1\sqrt{d}T^2)^j e^{-NT^2} \sup_{\widetilde{\Omega}} |\widetilde{a}_\lambda| \\ &\leq CN^{-1}(r_1\sqrt{d}T^2)^{2cN} e^{-NT^2} \sup_{\widetilde{\Omega}} |\widetilde{a}_\lambda| \\ &\leq CN^{-1} \sup_{\widetilde{\Omega}} |\widetilde{a}_\lambda| \exp(N(-T^2 + 2c\log(r_1\sqrt{d}T^2))).\end{aligned}$$

In particular, if $c < \frac{T^2}{2\log(r_1\sqrt{d}T^2)}$ then there exists $c' > 0$ such that

$$\left|\int_{\mathbb{R}^d \setminus V_{\mathbb{R}}} e^{-Ny^2} \sum_{|\nu|=j} \frac{b_{\lambda,\nu}}{\nu!} y^\nu \mathrm{d}y\right| \leq CN^{-1} e^{-c'N} \sup_{\widetilde{\Omega}} |\widetilde{a}_\lambda|.$$

Summing over $0 \leq j \leq 2cN$ yields

$$\left|\int_{\mathbb{R}^d \setminus V_{\mathbb{R}}} e^{-Ny^2} \sum_{|\nu| \leq 2cN} \frac{b_{\lambda,\nu}}{\nu!} y^\nu \mathrm{d}y\right| \leq Ce^{-c'N} \sup_{\widetilde{\Omega}} |\widetilde{a}_\lambda|.$$

We are left with

$$\sum_{j \leq 2cN} \int_{\mathbb{R}^d} e^{-Ny^2} \sum_{|\nu|=j} \frac{b_{\lambda,\nu}}{\nu!} y^\nu \mathrm{d}y = N^{-\frac{d}{2}} \sum_{k=0}^{cN} \frac{\Delta^k b_\lambda(0)}{N^k k!}.$$

This concludes the proof. □

Remark 7.3.4. In what follows, we will apply the complex stationary phase lemma in situations where, for λ belonging to a compact Z, one has $\widetilde{x}_\lambda = 0$ and $\Re\Phi_\lambda < 0$ on $\Omega \setminus \{0\}$. In this setting, Proposition 7.3.3 is true uniformly for λ in a small, N-independent neighbourhood of Z.

7.4 Combinatorial inequalities

In this section we prove several inequalities which appear throughout Part II.

We denote by Γ the Gamma function, which is the only log-convex function on $(0,+\infty)$ such that $\Gamma(n+1)=n!$ for every integer n. We denote by ψ the Digamma function, defined as the log-derivative of Γ. The letters i,j,k,l,n represent integers, and the letters μ,ν represent polyindices.

Lemma 7.4.1. *Let $c>0$. The function $\Gamma(x+c)/\Gamma(x)$ is increasing on $(0,+\infty)$.*

In particular, if $i\le j\le k$ then

$$\binom{j}{i}\le\binom{k}{i}.$$

Proof. The log-derivative of $x\mapsto\Gamma(x+c)/\Gamma(x)$ is $\psi(x+c)-\psi(x)$. Since Γ is log-convex, ψ is increasing so that $\psi(x+c)-\psi(x)>0$, hence the claim.

For the second part of the claim, we consider the function $x\mapsto\binom{x}{i}=\frac{\Gamma(x+i+1)}{\Gamma(x+1)\Gamma(i+1)}$. This function is increasing as we have just shown, so that its value at j is smaller than its value at $k\ge j$. □

Lemma 7.4.2. *If $\nu\le\mu$ then*

$$\binom{\mu}{\nu}\le\binom{|\mu|}{|\nu|}.$$

Proof. Let us prove the following inequality, from which one can deduce the original claim by induction:

$$\binom{j}{i}\binom{l}{k}\le\binom{j+l}{i+k}.$$

The well-known identity

$$\binom{j+l}{i+k}=\binom{j+l-1}{i+k-1}+\binom{j+l-1}{i+k}=\binom{1}{1}\binom{j+l-1}{i+k-1}+\binom{1}{1}\binom{j+l-1}{i+k}$$

can be generalised by induction:

$$\binom{j+l}{i+k}=\sum_{n=0}^{j}\binom{j}{n}\binom{l}{i+k-n}.$$

All terms in the sum are positive so that the sum is greater than any of its terms. In particular,

$$\binom{j+l}{i+k}\ge\binom{j}{i}\binom{l}{k}.$$

□

Lemma 7.4.3. *If $0\le i\le j$ and $1\le k\le l-1$, then*

$$\frac{(i+k-1)!(j+l-i-k-1)!}{i!k!(j-i)!(l-k)!}\le\frac{(j+l-2)!}{j!(l-1)!}.$$

In particular, if $a_1,\dots,a_n$ are nonnegative integers and $b_1,\dots,b_n$ are positive integers, with $\sum_{i=1}^n a_i=j$ and $\sum_{i=1}^n b_i=l$, then

$$\frac{(a_1+b_1-1)!\dots(a_n+b_n-1)!}{a_1!b_1!\dots a_n!b_n!}\le\frac{(j+l-n)!}{j!(l-n+1)!}.$$

Proof. For the first part, let $k' = k-1$, then

$$\frac{(i+k-1)!(j+l-i-k-1)!}{i!k!(j-i)!(l-k)!} = \frac{1}{k(l-k)}\binom{i+k'}{i}\binom{j+l-2-i-k'}{j-i}.$$

Since $1 \le k \le l-1$ there holds $\frac{1}{k(l-k)} \le \frac{1}{l-1}$. Moreover, from Lemma 7.4.2, one has

$$\binom{i+k'}{i}\binom{j+l-2-i-k'}{j-i} \le \binom{j+l-2}{j} = \frac{(j+l-1)!}{j!(l-2)!}.$$

Hence,

$$\frac{(i+k-1)!(j+l-i-k-1)!}{i!k!(j-i)!(l-k)!} \le \frac{(j+l-2)}{j!(l-1)!}.$$

The second part is deduced from the first part by induction. Indeed, we just proved that, denoting $a'_{n-1} = a_{n-1} + a_n$ and $b'_{n-1} = b_{n-1} + b_n - 1$, one has

$$\frac{(a_1+b_1-1)!\dots(a_n+b_n-1)!}{a_1!b_1!\dots a_n!b_n!} \le \frac{(a_1+b_1-1)!\dots(a_{n-2}+b_{n-2}-1)!(a'_{n-1}+b'_{n-1}-1)!}{a_1!b_1!\dots a_{n-2}!b_{n-2}!a'_{n-1}!b'_{n-1}!}.$$

Here, the sum of the a_i's has not changed but the sum of the b_i's has been reduced by one. By induction,

$$\frac{(a_1+b_1-1)!\dots(a_n+b_n-1)!}{a_1!b_1!\dots a_n!b_n!} \le \frac{(j+l-n)!}{j!(l-n+1)!}.$$

□

Lemma 7.4.4. *Let $\ell \ge 2$ and $n \ge 2$ be integers. The set*

$$\left\{(i_1,\dots,i_n) \in \mathbb{N}_0^n, \sum_{k=1}^n i_k = \ell, \text{ at least two of them are } \ge 1\right\}.$$

is contained in the convex hull of all permutations of $(\ell-1,1,0,\dots,0)$.

Proof. Let us call *support* of a tuple $(i_1,\dots,i_n)$ the number of its elements which are non-zero. We will prove by induction on $2 \le k \le \min(n,\ell)$ that the convex hull S of the permutations of $(\ell-1,1,0,\dots,0)$ contain all tuples of support k such that the sum of all elements is ℓ.

For $k=2$, we can indeed recover all elements of the form $(\ell-x,x,0,\dots,0)$ for all $1 \le x \le \ell-1$ by a convex combination of $(\ell-1,1,0,\dots,0)$ and $(1,\ell-1,0,\dots,0)$.

We now proceed to the induction. Suppose that S contains all elements of the form $(i_1,\dots,i_{k-1},0,\dots,0)$ and their permutations. Then, in particular, it contains $a_0 = (\ell-k+2,1,\dots,1,0,\dots,0)$. For every $1 \le j \le k-2$, S also contains the image of a_0 by the transposition $(k,k-j)$, which we denote by a_j. Moreover, S contains $(\frac{\ell}{k-1},\dots,\frac{\ell}{k-1},0,\dots,0)$ and its permutations. From the $(a_j)_{0\le j\le k-2}$ and $(\frac{\ell}{k-1},\dots,\frac{\ell}{k-1},0,\dots,0)$, one can form the convex combination

$$\frac{\ell-k+1}{(\ell-k+2)(k-2)}\sum_{j=0}^{k-2} a_j + \frac{1}{\ell-k+2}\left(0,\frac{\ell}{k-1},\dots,\frac{\ell}{k-1},0,\dots,0\right) = (\ell-k+1,\underbrace{1,\dots,1}_{k-1},0,\dots,0).$$

In particular, S contains all permutations of $(l-k+1, 1, \ldots, 1, 0, \ldots, 0)$. Thus, S contains all elements of support k, since the k-uple $(l-k, 0, \ldots, 0)$ and its permutations are the extremal points of the convex $\{\sum_{j=1}^{k} i_j = \ell - k\}$). This concludes the induction. $\square$

8

EXPONENTIAL CONTROLS FOR TOEPLITZ OPERATORS

In this chapter we obtain exponentially precise controls on the Bergman kernel and Toeplitz operators in real-analytic regularity. These results are stated in Section 8.1.

We use the method of analytic stationary phase to study the composition properties of covariant Toeplitz operators, which allows us to prove Theorems 8.1, 8.2, and 8.3.

8.1 Statement of the main results

We begin with the definition of what will be the phase of the Bergman kernel. We use the standard notion of holomorphic extensions of real-analytic functions and manifolds, under a notation convention which is recalled in detail in Section 7.1.3.

Definition 8.1.1 (A section of $L^{\otimes N} \boxtimes \overline{L}^{\otimes N}$)**.** Let M be a real-analytic Kähler manifold and let $U \subset M$ be a contractible open set.

Let s denote a non-vanishing, bounded, holomorphic section of L on U. Then $\phi = -\frac{1}{2}\log(|s|_h^2)$ is called a *Kähler potential* on U. The function ϕ is real-analytic on U since h is real-analytic, so that there is a unique function $\widetilde{\phi}$ on a neighbourhood of the diagonal of $U \times U$, which is holomorphic in the first variable and anti-holomorphic in the second variable, and such that $\widetilde{\phi}(x,x) = \phi(x)$. We call *holomorphic extension* such a $\widetilde{\phi}$. (This coincides with the usual notion of holomorphic extension, see Subsections 7.1.2 and 7.1.3 for details).

The function $(x,y) \mapsto e^{2N\widetilde{\phi}(x,y)}$ is well-defined in a neighbourhood of the diagonal in $U \times U$, so that the following section of $(L \boxtimes \overline{L})^{\otimes N}$

$$\Psi_s^N : (x,y) \mapsto (s(x))^{\otimes N} \otimes (\overline{s(y)})^{\otimes N} e^{2N\widetilde{\phi}(x,y)}.$$

is well-defined in a neighbourhood of the diagonal of $U \times U$, holomorphic in the first variable and anti-holomorphic in the second variable.

The section Ψ_s^N is independent of the holomorphic chart on U. It is also independent of the choice of s. Indeed, if s' is another non-vanishing holomorphic section of L on U, one has $s' = e^f s$ where f is a holomorphic function on U. In particular, the associated Kähler potential $\phi' = -\frac{1}{2}\log(|s'|_h^2)$ satisfies

$$\phi' = \phi + \frac{1}{2}(f + \overline{f}),$$

so that

$$\widetilde{\phi'}(x,y) = \widetilde{\phi}(x,y) + \frac{1}{2}(f(x) + \overline{f(y)});$$

hence

$$\Psi_{s'}^N(x,y) = \Psi_s^N(x,y) e^{-N(f(x)-f(x)+\overline{f(y)-f(y)})} = \Psi_s^N(x,y).$$

As this section does not depend on s, we call it now Ψ_U^N. In particular, given two contractible open sets $U \cap V$, one has $\Psi_U^N = \Psi_V^N$ near the diagonal of $U \cap V$. Hence, there exists a section Ψ^N of $L^{\otimes N} \boxtimes \overline{L}^{\otimes N}$ on a neighbourhood of the diagonal in $M \times M$, whose restriction to each open set U is $\Psi_U^{\otimes N}$.

Note that the domain of definition of Ψ^N is independent of N.

The section Ψ was first introduced by Charles [Cha00] to study the Bergman kernel and covariant Toeplitz operators.

In the general setting of a Kähler manifold with real-analytic data, it has been conjectured [HLX17] that the Bergman kernel takes the following form: for some $c > 0$, for all $(x, y) \in M^2$,

$$S_N(x, y) = \Psi^N(x, y) \sum_{k=0}^{cN} N^{d-k} a_k(x, y) + O(e^{-cN}),$$

where the a_k are, in a neighbourhood of the diagonal in $M \times M$, holomorphic in the first variable and anti-holomorphic in the second variable, with

$$\|a_k\|_{C^0} \leq CR^k k!.$$

The well-behaviour of such sequences of functions when the sum $\sum N^{-k} a_k$ is computed up to the rank cN with $c < e/2R$ was first observed in [Sjö82] and was the foundation for a theory of analytic pseudodifferential operators and Fourier Integral Operators. Here, we rely on more specific function classes, where we control successive derivatives of the a_k's. Without giving a precise definition at this stage let us call "analytic symbols" such well-controlled sequences of real-analytic functions. See Definition 7.2.3 about the analytic symbol spaces $S_m^{r,R}(X)$ and the associated summation. This allows us to prove the conjecture above:

Theorem 8.1. *Let M be a quantizable compact real-analytic Kähler manifold of complex dimension d. There exists positive constants r, R, m, c, c', C, a neighbourhood U of the diagonal in $M \times M$, and an analytic symbol $a \in S_m^{r,R}(U)$, holomorphic in the first variable, anti-holomorphic in the second variable, such that the Bergman kernel S_N on M satisfies, for each $x, y \in M \times M$ and $N \geq 1$:*

$$\left\| S_N(x, y) - \Psi^N(x, y) \sum_{k=0}^{cN} N^{d-k} a_k(x, y) \right\|_{h^{\otimes N}} \leq Ce^{-c'N}.$$

Equivalently, the operator with kernel given by $\Psi^N(x, y) \sum_{k=0}^{cN} N^{d-k} a_k(x, y)$ is exponentially close (in the $L^2 \mapsto L^2$ operator sense) to the Bergman projector.

Theorem 8.1 also appears in recent and independent work [RSN18], where the authors use Local Bergman kernels as developed in [BBS08] to study locally the Bergman kernel as an analytic Fourier Integral Operator.

In order to study contravariant Toeplitz operators of Definition 8.2.1, as well as the Bergman kernel itself, it is useful to consider *covariant* Toeplitz operators, first introduced in [Cha03], which are the object of the next Theorem. Recalling the section Ψ^N of Definition 8.1.1, for f an analytic symbol on $M \times M$, which is, near the diagonal, holomorphic in the first variable and anti-holomorphic in the second

variable, the associated covariant Toeplitz operator is defined as the operator with kernel:

$$T_N^{cov}(f)(x,y) = \Psi^N(x,y)\left(\sum_{k=0}^{cN} N^{d-k} f_k(x,y)\right),$$

for some small $c > 0$; see Definition 8.2.1.

Theorem 8.2. *Let M be a quantizable compact real-analytic Kähler manifold. Let f and g be analytic symbols on a neighbourhood U of the diagonal in $M \times M$, which are holomorphic in the first variable and anti-holomorphic in the second variable.*

Then there exists $c' > 0$ and an analytic symbol $f\sharp g$ on the same neighbourhood U, holomorphic in the first variable and anti-holomorphic in the second variable, and such that

$$T_N^{cov}(f)T_N^{cov}(g) = T_N^{cov}(f\sharp g) + O(e^{-c'N}).$$

For any r, R, m large enough, the product $\sharp$ is a continuous bilinear application from $S_m^{r,R}(U) \times S_m^{2r,2R}(U)$ to $S_m^{2r,2R}(U)$ (see Definition 7.2.3); the constant c' depends only on r, R, m.

If the principal symbol of f does not vanish on M then there is an analytic symbol $f^{\sharp -1}$ such that, for some $c' > 0$, one has

$$T_N^{cov}(f)T_N^{cov}(f^{\sharp -1}) = S_N + O(e^{-c'N}).$$

Given an analytic symbol $f \in S_{m_0}^{r_0,R_0}(U)$ with non-vanishing subprincipal symbol, there exists $C > 0$ such that for every r, R, m large enough (depending on f, r_0, R_0, m_0), one has

$$\|f^{\sharp -1}\|_{S_m^{r,R}(U)} \leq C\|f\|_{S_m^{r,R}(U)}.$$

As an application of composition and inversion properties, one can study the concentration rate of eigenfunctions, in the general case (exponential decay in the forbidden region) as well as in the particular case where the principal symbol has a non-degenerate minimum.

Theorem 8.3. *Let M be a quantizable compact real-analytic Kähler manifold. Let f be a real-analytic, real-valued function on M and $E \in \mathbb{R}$. Let $(u_N)_{N\geq 1}$ be a normalized sequence of $(\lambda_N)_{N\geq 1}$-eigenstates of $T_N(f)$ with $\lambda_N \underset{N\to+\infty}{\to} E$. Then, for every open set V at positive distance from $\{f = E\}$ there exist positive constants c, C such that, for every $N \geq 1$, one has*

$$\int_V \|u_N(x)\|_h^2 \frac{\omega^{\wedge n}}{n!}(dx) \leq Ce^{-cN}.$$

We say informally that, in the forbidden region $\{f \neq E\}$, the sequence $(u_N)_{N\in\mathbb{N}}$ has an exponential decay rate.

In the rest of this Section we prove Theorems 8.1, 8.2, and 8.3.

We begin in Section 8.2 with the definition, and the first properties, of covariant Toeplitz operators. Then, in Sections 8.3 to 8.5, we study them. We prove that they can be composed (Proposition 8.4.3), and inverted (Propositions 8.5.1 and 8.5.2), with a precise control on the analytic classes involved. This allows us to prove Theorem 8.1: see the beginning of Section 8.5 for a detailed proof strategy for Theorems 8.1 and 8.2. To conclude, in Subsection 8.6 we prove Theorem 8.3.

Until the end of this chapter, M is a compact real-analytic quantizable Kähler manifold of dimension d.

8.2 Covariant Toeplitz operators

Definition 8.2.1. Let U denote a small, smooth neighbourhood of the codiagonal in $M \times M$; for instance $U = \{(x,y) \in M \times M, \mathrm{dist}(x,y) < \epsilon\}$ with ϵ small enough so that the section Ψ^N of Definition 8.1.1 is defined on a neighbourhood of U. The space $T_m^{-,r,R}(U)$ of *covariant analytic Toeplitz operators* consists of operators with kernel

$$T_N^{cov}(f) : (x,y) \mapsto N^d \mathbb{1}_{(x,y)\in U} \Psi^N(x,y) f(N)(x,y),$$

where $f(N)$ is the summation of an analytic symbol $f \in S_m^{r,R}(U)$, with f holomorphic in the first variable and anti-holomorphic in the second variable.

Proposition 8.2.2. *There exists $c > 0$ such that, for all $(x,y) \in U$, there holds*

$$|\Psi^1(x,y)| \leq e^{-c\,\mathrm{dist}(x,y)^2}.$$

Proof. If $x = y$ then $\Psi^1(x,y) = |s(x)|^2 e^{-2\phi(x)} = 1$. In a holomorphic chart ρ for M around x (which sends 0 to x), one can choose ϕ such that the Taylor expansion of $\phi \circ \rho$ at zero is $\phi \circ \rho(z) = |z|^2 + O(|z|^3)$. Then $\mathrm{dist}(x, \rho(z)) = |z|^2 + O(|z|^3)$ as well, so that

$$|\Psi^1(x,\rho(z))| = e^{-\phi(x)-\phi(\rho(z))+2\widetilde{\phi}(x,\rho(z))} = e^{-|z|^2+O(|z|^3)}$$

is smaller than $e^{-c\,\mathrm{dist}(x,\rho(z))^2}$ on a neighbourhood of 0. □

Covariant Toeplitz operators are almost endomorphisms of $H^0(M, L^{\otimes N})$.

Proposition 8.2.3. *Let U denote a small, smooth neighbourhood of the diagonal in $M \times M$. There exists $c > 0$ such that the following is true. Let $f \in S_m^{r,R}(U)$ be holomorphic in the first variable and anti-holomorphic in the second variable, and S_N denote the Bergman kernel on M.*

Then, as $N \to +\infty$,

$$S_N T_N^{cov}(f) = T_N^{cov}(f) + O_{L^2 \mapsto L^2}(e^{-cN}).$$

Proof. We apply the Kohn estimate (17) to the kernel of $T_N^{cov}(f)$. Let χ be a smooth function on $M \times M$, which is equal to 1 on a neighbourhood of the diagonal and is supported inside U. Then, since $|\Psi| < 1$ outside the diagonal there exists c such that

$$\sup_{y\in M} \|x \mapsto N^d \Psi^N(x,y)(1-\chi(x,y))\|_{L^2} = O(e^{-cN}).$$

In particular, since $f(N)(x,y)$ is bounded independently on x, y, N by Proposition 7.2.6, one has

$$\sup_{y\in M} \|x \mapsto (1-\chi(x,y)) T_N^{cov}(f)(x,y)\|_{L^2} = O(e^{-cN}).$$

Since S_N is an orthogonal projector, it reduces the L^2 norm, so that

$$\sup_{y\in M} \|S_N(x \mapsto (1-\chi(x,y)) T_N^{cov}(f)(x,y))\|_{L^2} = O(e^{-cN}).$$

Moreover, $x \mapsto \chi(x,y) T_N^{cov}(f)(x,y)$ is holomorphic except on

$$\{x \in M, 0 < \chi(x,y) < 1\}$$

where $T_N^{cov}(f)(x,y)$ is exponentially small. Then

$$\sup_{y\in M} \|\overline{\partial}(x \mapsto \chi(x,y)T_N^{cov}(f)(x,y))\|_{L^2} \leq \|\overline{\partial}\chi\|_{L^\infty} O(e^{-cN}) = O(e^{-cN}).$$

Hence, by (17),

$$\sup_{y\in M} \|(I-S_N)(x \mapsto \chi(x,y)T_N^{cov}(f)(x,y))\|_{L^2} = O(e^{-cN}).$$

In particular,

$$\sup_{y\in M} \|(I-S_N)(x \mapsto T_N^{cov}(f)(x,y))\|_{L^2} = O(e^{-cN}).$$

Since M is compact, its volume is finite, so that one can conclude:

$$\begin{aligned}\|(I-S_N)T_N^{cov}(f)\|^2_{L^2\to L^2} &\leq \iint_{M\times M} |((I-S_N)T_N^{cov}(f))(x,y)|^2 \mathrm{d}x\mathrm{d}y \\ &\leq Vol(M) \sup_{y\in M} \|(I-S_N)(x \mapsto T_N^{cov}(f)(x,y))\|_{L^2} = O(e^{-cN}).\end{aligned}$$

□

8.3 Study of an analytic phase

In this work, covariant Toeplitz operators of Definition 8.2.1 have the following integral kernels:

$$T_N^{cov}(f) : (x,y) \mapsto \Psi^N(x,y)\left(\sum_{k=0}^{cN} N^{d-k} f_k(x,y)\right).$$

The integral kernel of the composition of two covariant Toeplitz is of particular interest, so let us study its phase.

If f and g are analytic symbols, then $T_N^{cov}(f)T_N^{cov}(g)$ has the following kernel:

$$(x,z) \mapsto \Psi^N(x,z)\times$$
$$\int_M e^{N(2\widetilde{\phi}(x,y)-2\phi(y)+2\widetilde{\phi}(y,z)-2\widetilde{\phi}(x,z))}\left(\sum_{k=0}^{cN} N^{d-k} f_k(x,y)\right)\left(\sum_{j=0}^{cN} N^{d-j} g_j(y,z)\right)\mathrm{d}y.$$

Indeed, if s is a local holomorphic non-vanishing section of L, with $\langle s,s\rangle_h = e^{-2\phi}$, and $\widetilde{\phi}$ denotes the complex extension of ϕ, then for every $(x,y,z)\in M^3$ one has

$$\begin{aligned}\langle \Psi^N(x,y), \Psi^N(y,z)\rangle_h &= s(x)^{\otimes N} \otimes \overline{s(z)}^{\otimes N} e^{2N\widetilde{\phi}(x,y)+2N\widetilde{\phi}(y,z)} \langle s(y), s(y)\rangle_h^N \\ &= \Psi^N(x,z) e^{2N\widetilde{\phi}(x,y)-2N\phi(y)+2N\widetilde{\phi}(y,z)-2N\widetilde{\phi}(x,z)}.\end{aligned}$$

We let Φ_1 be the complex extension (with respect to the middle variable) of the phase appearing in the last formula:

$$\Phi_1 : (x,y,\overline{w},\overline{z}) \mapsto 2\widetilde{\phi}(x,\overline{w}) - 2\widetilde{\phi}(y,\overline{w}) + 2\widetilde{\phi}(y,\overline{z}) - 2\widetilde{\phi}(x,\overline{z}).$$

We write $\Phi_1(x,y,\overline{w},\overline{z})$ to indicate anti-holomorphic dependence on the two last variables. In particular, Φ_1 is holomorphic on the open set $U\times U$ of

$$M \times \widetilde{M} \times \overline{M} = M_x \times (M_y \times \overline{M}_{\overline{w}}) \times \overline{M}_{\overline{z}}.$$

Proposition 8.3.1. *There exists a neighbourhood U of $\{(x,\overline{z}) \in M \times \overline{M}, \overline{x} = \overline{z}\}$ such that function Φ_1, on the open set*

$$\{(x,y,\overline{y},\overline{z}), (x,\overline{w}) \in U, (y,\overline{w}) \in U, (x,\overline{z}) \in U\},$$

is an analytic phase of $(y,\overline{w})$, with parameter $\lambda = (x,\overline{z})$. The critical point is $(x,\overline{z})$.

In particular, after a trivialisation of a tubular neighbourhood of

$$\{(x,y,\overline{w},\overline{z}) \in M \times \widetilde{M} \times \overline{M}, (x,\overline{z}) \in U, (y,\overline{w}) = (x,\overline{z})\}$$

in

$$\{(x,y,\overline{w},\overline{z}) \in M \times \widetilde{M} \times \overline{M}, (x,\overline{z}) \in U\}$$

as a vector bundle over the former, the analytic phase Φ_1 satisfies the assumptions of Remark 7.3.4.

Proof. On the diagonal $x = z$, the Taylor expansion of Φ_1 near $(x,\overline{x})$ with respect to the variables $(y,\overline{w})$ is

$$(y,\overline{w}) \mapsto -(x-y)(\overline{x}-\overline{w}) + O(|x-y|^3 + |\overline{x}-\overline{w}|^3),$$

so that there is a critical point at $(x,\overline{x})$ in $\widetilde{M}$, where the real part of Φ_1 reaches zero as nondegenerate maximum. Hence, for z close to x there is only one critical point near $(x,\overline{x})$.

This critical point is explicit: it solves the following two equations:

$$\begin{aligned} 0 = \overline{\partial}_{\overline{w}}\Phi_1 &= -\overline{\partial}_2\widetilde{\phi}(x,\overline{w}) + \overline{\partial}_2\widetilde{\phi}(y,\overline{w}) \\ 0 = \partial_y\Phi_1 &= -\partial_1\widetilde{\phi}(y,\overline{z}) + \partial_1\widetilde{\phi}(y,\overline{w}). \end{aligned}$$

These equations are satisfied if $y = x, \overline{w} = \overline{z}$, which concludes the proof. □

8.4 Composition of covariant Toeplitz operators

In this subsection we study the composition rules for operators with kernels of the form

$$T_N^{cov}(f)(x,y) = \Psi^N(x,y)\left(\sum_{k=0}^{cN} N^{d-k} f_k(x,y)\right).$$

Here, for a small, smooth neighbourhood U of the diagonal in $M \times M$, one has $f \in S_m^{r,R}(U)$, and f is holomorphic in the first variable and anti-holomorphic in the second variable.

It is well-known that such operators can be formally composed, that is,

$$T_N^{cov}(f)T_N^{cov}(g) = T)N^{cov}(f\sharp g) + O(N^{-\infty}),$$

where $f\sharp g$ is a classical symbol. We first study this formal calculus by proving a weak form of the Wick rule in Proposition 8.4.1. Then in Lemma 8.4.2 we control, in an analytic norm, differential operators as the ones relating $f\sharp g$ to f and g. This allows us, in Proposition 8.4.3, to prove that, if f and g are analytic symbols, then $f\sharp g$ is also an analytic symbol, so that one can perform an analytic summation (as in Proposition 7.2.6), and the error in the composition becomes $O(e^{-cN})$.

Proposition 8.4.1. *(See also [Cha00], Lemme 2.33 and [Cha03], Lemma 9) The composition of two covariant Toeplitz operators can be written as a formal series in N^{-1}. More precisely, if f and g are functions on a neighbourhood of the diagonal in $M \times M$, holomorphic in the first variable, anti-holomorphic in the second variable, then*

$$T_N^{cov}(f)T_N^{cov}(g) = T_N^{cov}(h) + O(N^{-\infty}),$$

where h is a formal series $h \sim \sum_{k\geq 0} N^{-k}h_k$, holomorphic in the first variable, anti-holomorphic in the second variable. The composition law can be written as

$$h_k = B_k(f, g),$$

where B_k is a bidifferential operator of degree at most k in f and at most k in g.

Proof. It is well-known (see [Cha03], Theorem 2) that there exists an invertible formal series a of functions defined on a neighbourhood of the diagonal in $M \times M$, holomorphic in the first variable and anti-holomorphic in the second variable, which correspond to the Bergman kernel, that is, such that

$$T_N^{cov}(a) = S_N + O(N^{-\infty}).$$

In Theorem 8.1, we will prove that a is in fact an analytic symbol; for the moment, it is sufficient to know that a exists as a formal series.

Let us deform covariant Toeplitz operators by this formal symbol a, into *normalised* covariant Toeplitz operators of the form $T_N^{cov}(f * a)$. Here $*$ denotes the Cauchy product of symbols (Proposition 7.2.8). Since in this case f and g are simply holomorphic functions one has $f * a = fa$ and $g * a = ga$.

We will first prove our claim for this modified quantization: that is, there exists a sequence of bidifferential operators $(C_k)_{k\geq 0}$ acting on functions on a neighbourhood of the diagonal in $M \times M$, such that, given two such functions f and g, if we let

$$h = \sum_{k=0}^{+\infty} N^{-k}C_k(f, g) + O(N^{-\infty}),$$

then

$$T_N^{cov}(h * a) = T_N^{cov}(fa)T_N^{cov}(ga) + O(N^{-\infty}).$$

Moreover, C_k is of order at most k in each of its arguments. Then, we will relate the coefficients C_k with the coefficients B_k in the initial claim.

The claim is easier to prove for the coefficients C_k because normalised covariant Toeplitz quantization follows the Wick rule. Indeed, if the function f, near a point x_0, depends only on the first variable (that is, the restriction of f to the diagonal is, near this point, a holomorphic function on M), then the kernel $T_N^{cov}(af)(x, y)$, for x close to x_0, can be written as $f(x)T_N^{cov}(a)(x, y) = f(x)S_N(x, y) + O(N^{-\infty})$. In particular, for x close to x_0 the Wick rule holds:

$$T_N^{cov}(af)T_N^{cov}(ag)(x, y) = T_N^{cov}(afg)(x, y) + O(N^{-\infty}),$$

since by Proposition 8.2.3 the kernel of $T_N^{cov}(ag)$ is almost holomorphic in the first variable, up to an $O(N^{-\infty})$ error. Thus, locally where f depends only on the first variable, there holds

$$\forall k \geq 1,\ C_k(f, g) = 0.$$

More generally, we wish to compute

$$N^{2d}\Psi^N(x,z)\int_M \exp(N\Phi_1(x,y,\overline{y},\overline{z}))(fa)(N)(x,\overline{y})(ga)(N)(y,\overline{z})\mathrm{d}y,$$

where we recall that

$$\Phi_1(x,y,\overline{w},\overline{z}) = -2\widetilde{\phi}(x,\overline{w}) + 2\widetilde{\phi}(y,\overline{w}) - 2\widetilde{\phi}(y,\overline{z}) + 2\widetilde{\phi}(x,\overline{z}).$$

Here, we write $(fa)(N)(x,\overline{y})$ to indicate that fa is holomorphic in the first variable and anti-holomorphic in the second variable. Similarly, we write $\Phi_1(x,y,\overline{w},\overline{z})$ to indicate that Φ_1 is a function on $M_x \times \widetilde{M}_{y,\overline{w}} \times M_z$, holomorphic in its two first arguments and anti-holomorphic in the third argument; we integrate over M which is the subset of $\widetilde{M}$ such that $\overline{w} = \overline{y}$.

First of all, since for any $(x,z) \in U$ one has $|\Psi^N(x,z)| \leq e^{-cN\,\mathrm{dist}(x,z)^2}$, then there exists $C > 0$ such that, for any analytic symbol b on $U \times U$, there holds

$$\begin{aligned}
&N^{2d}\sup_x \int_M \left|\Psi^N(x,z)\int_M \exp(N\Phi_1(x,y,\overline{y},\overline{z}))b(N)(x,y,\overline{y},z)\mathrm{d}y\right|\mathrm{d}z\\
\leq &N^{2d}\sup_{U\times U}|b(N)|\sup_x\int_M\int_M |\Psi^N(x,y)||\Psi^N(y,z)|\mathrm{d}y\mathrm{d}z\\
\leq &\sup_{U\times U}|b(N)|N^{2d}\sup_x\int_{M\times M} e^{-Nc\,\mathrm{dist}(x,y)^2 - Nc\,\mathrm{dist}(y,z)^2}\mathrm{d}y\mathrm{d}z\\
\leq &C\sup_{U\times U}|b(N)|.
\end{aligned}$$

In particular, by the Schur test, the operator with kernel

$$(x,z)\mapsto N^{2d}\int_M \exp(N\Phi_1(x,y,\overline{y},\overline{z}))b(x,y,\overline{y},z)\mathrm{d}y$$

is bounded from $L^2(M,L^{\otimes N})$ to itself, independently on N.

As $\partial_y\Phi_1$ vanishes in a non-degenerate way at $\overline{w} = \overline{z}$, one can write

$$f(x,\overline{w}) = f(x,\overline{z}) - \partial_y\Phi_1\cdot F_1(x,\overline{z},y,\overline{w}).$$

Thus,

$$\begin{aligned}
&N^{2d}\Psi^N(x,z)\int_M e^{N\Phi_1(x,y,\overline{y},\overline{z})}(fa)(N)(x,\overline{y})(ga)(N)(y,\overline{z})\mathrm{d}y\\
&\qquad = N^{2d}\Psi^N(x,z)f(x,\overline{z})\int_M e^{N\Phi_1(x,y,\overline{y},\overline{z})}a(N)(x,\overline{y})(ga)(N)(y,\overline{z})\mathrm{d}y\\
&+ N^{-1}N^{2d}\Psi^N(x,z)\int_M e^{N\Phi_1(x,y,\overline{y},\overline{z})}a(N)(x,\overline{y})\partial_M[F_1(x,\overline{z},y,\overline{y})(ga)(N)(y,\overline{z})]\mathrm{d}y.
\end{aligned}$$

The first term in the right-hand side above is equal to

$$f(x,\overline{z})\int_M T_N^{cov}(a)(x,\overline{y})T_N^{cov}(ga)(y,\overline{z})\mathrm{d}y = f(x,\overline{z})T_N^{cov}(ga)(x,\overline{z}) + O(N^{-\infty}),$$

since $T_N^{cov}(a) = S_N + O(N^{-\infty})$.

In the second line, which is of order N^{-1} by a Schur test, derivatives of g of order at most 1 appear. This remainder can be written as

$$N^{-1}N^{2d}\Psi^N(x,z)\int_M e^{N\Phi_1(x,y,\overline{y},\overline{z})}a(N)(x,\overline{y})[\partial_y F_1(x,\overline{z},y,\overline{y})](ga)(N)(y,\overline{z})\mathrm{d}y$$
$$+N^{-1}N^{2d}\Psi^N(x,z)\int_M e^{N\Phi_1(x,y,\overline{y},\overline{z})}a(N)(x,\overline{y})F_1(x,\overline{z},y,\overline{y})[\partial_y(ga)(N)(y,\overline{z})\mathrm{d}y.$$

We recover the initial expression, where f has been replaced with either F_1 or $\partial_y F_1$, and g has potentially been differentiated once. Thus, by induction, the coefficient $C_k(f,g)$ only differentiates at most k times on g. By duality, $C_k(f,g)$ only differentiates at most k times on f.

Let us now relate the coefficients C_k and B_k. Let a^{*-1} denote the inverse of a for the Cauchy product. One has

$$\begin{aligned}T_N^{cov}(f)T_N^{cov}(g) &= T_N^{cov}((fa^{*-1})*a)T_N^{cov}((ga^{*-1})*a)+O(N^{-\infty})\\ &= T_N^{cov}((C_k(f,g))_{k\geq 0}*a)+O(N^{-\infty}),\end{aligned}$$

so that the coefficients B_k in the initial claim are recovered as

$$B_k(f,g)=\sum_{j+l+m\leq k} a_j C_{k-j-l-m}(fa_l^{*-1},ga_m^{*-1}),$$

thus B_k itself differentiates at most k times on f and at most k times on g. □

The covariant normalised version of the result above is shown in [Cha00], using a different computational method for the stationary phase.

The previous proposition predicts that, when applying a stationary phase lemma to Φ_1 in order to study $T_N^{cov}(f)T_N^{cov}(g)$, at order n, only derivatives of f and g at order n will appear. However, in the stationary phase (Lemma 7.3.3), these derivatives appear in the form of an usual Laplace operator, conjugated by a change of variables. Let us then prove the following technical lemma.

Lemma 8.4.2. *Let U,V,Λ be domains in $\mathbb{C}^d$ containing 0. Let κ_λ be a biholomorphism from V to U,with real-analytic dependence on $\lambda\in\Lambda$, and such that $\kappa_\lambda(0)=0$ for all $\lambda\in\Lambda$. Let $\kappa(\lambda,v)\mapsto\kappa_\lambda(v)$, and suppose that there exists C_κ,r_0,m_0 such that, for all $j\in\mathbb{N}$, one has*

$$\|\kappa\|_{C^j(V\times\Lambda)}\leq C\frac{r_0^j j!}{(j+1)^{m_0}}.$$

Then the following is true for all $m\geq m_0, r\geq 8r_0 2^{m-m_0}$.

Let f be a real-analytic function on $U\times\Lambda$, and suppose that there exists C_f and $k\geq 0$ such that

$$\|f\|_{C^j(U\times\Lambda)}\leq C_f\frac{r^j(j+k)!}{(j+k+1)^m}.$$

Let $n\leq k$ and $i\leq 2n$; let ∇_v^i denote the i-th gradient (as in Definition 7.1.10) over the first set of variables, acting on $V\times\Lambda$; then

$$g\mapsto(\lambda\mapsto\nabla_v^i g(\kappa_\lambda(v),\lambda)_{v=0})$$

is a differential operator of degree i, from functions on $U \times \Lambda$ to vector-valued functions on Λ. Let $(\nabla^i_\kappa)^{[\leq n]}$ denote the truncation of this differential operator to a differential operator of degree less than n.

Then, with

$$\gamma = 4Cr,$$

and

$$A(i,j,k,n) = \begin{cases} (i+j+k)! & \text{if } i \leq n \\ \max((n+j+k)!(i-n)!, (j+k)!i!) & \text{otherwise.} \end{cases}$$

one has, for every $j \geq 0$,

$$\|(\nabla^i_\kappa)^{[\leq n]} f\|_{\ell^1(C^j(\Lambda))} \leq i^{d+1} j^{d+1} \gamma^i C_f \frac{r^{j+i}}{(i+j+l+1)^m} A(i,j,k,n).$$

Proof. Let us make explicit the operator $(\nabla^i_\kappa)^{[\leq n]}$. Given a polyindex μ with $|\mu| = i$, the Faà di Bruno formula states:

$$\partial^\mu_v (f(\kappa_\lambda(v), \lambda))_{v=0} = \sum_{P \in \Pi(\{1,\ldots,i\})} f^{|P|}(0,\lambda) \prod_{E \in P} (\partial^E \kappa_\lambda)(0),$$

where the sum runs among all partitions $P = \{E_1, \ldots, E_{|P|}\}$ of $\{1, \ldots, i\}$.

When considering the operator $(\nabla^i_\kappa)^{[\leq n]}$, we only need to consider partitions P such that $|P| \leq n$. If the sizes $|E_1| = s_1, \ldots, |E_{|P|}| = s_{|P|}$ of the elements of P are fixed, the number of possible partitions is simply

$$\frac{i!}{(|P|)! s_1! \ldots s_{|P|}!}.$$

Then, since there are less than i^d polyindices μ with $|\mu| = i$, one has, for all $\rho \in \mathbb{N}^d$ with $|\rho| = j$, by differentiation of the Faà di Bruno formula and Proposition 7.2.2,

$$\|\partial^\rho((\nabla^i_\kappa)^{[\leq n]} f)\|_{\ell^1} \leq$$
$$i^d \sum_{|P|=1}^{\min(n,i)} \sum_{\substack{e_0+\ldots+e_{|P|}=j \\ s_1+\ldots+s_{|P|}=|P|}} \frac{j!}{e_0! e_1! \ldots e_{|P|}!} \frac{i!}{(|P|)! s_1! \ldots s_{|P|}!} \|f\|_{C^{|P|+e_0}} \prod_{i=1}^{|P|} \|\kappa\|_{C^{s_i+e_i}}.$$

Here κ denotes the real-analytic function $(\lambda, v) \mapsto \kappa_\lambda(v)$.

In particular, since there are less than j^d polyindices ρ such that $|\rho| = j$, one has

$$\|\partial^\rho((\nabla^i_\kappa)^{[\leq n]} f)\|_{\ell^1} \leq$$
$$i^d j^d \sum_{|P|=1}^{\min(n,i)} \sum_{\substack{e_0+\ldots+e_{|P|}=j \\ s_1+\ldots+s_{|P|}=|P|}} \left(\frac{j!}{e_0! e_1! \ldots e_{|P|}!} \frac{i!}{(|P|)! s_1! \ldots s_{|P|}!} \|f\|_{C^{|P|+e_0}} \prod_{i=1}^{|P|} \|\kappa\|_{C^{s_i+e_i}} \right). \tag{20}$$

Since, for all $j \geq 0$, one has

$$\|\kappa\|_{C^j(V \times \Lambda)} \leq C \frac{r_0^j j!}{(j+1)^{m_0}},$$

by Lemma 7.1.11, for all $m \geq m_0, r \geq 8r_0 2^{m-m_0}$, one has

$$\|\kappa\|_{C^j} \leq C \frac{(r/8)^j j!}{(j+1)^m}.$$

In particular, if $j \geq 1$, there holds

$$\|\kappa\|_{C^j} \leq C \frac{(r/4)^j (j-1)!}{j^m} j \left(\frac{j}{j+1}\right)^m 2^{-j} \leq C \frac{(r/4)^j (j-1)!}{j^m},$$

since

$$j \left(\frac{j}{j+1}\right)^m 2^{-j} \leq j 2^{-j} \leq 1.$$

Let us suppose further that

$$\|f\|_{C^j(U \times \Lambda)} \leq C_f \frac{r^j R^l (j+l)!}{(j+l+1)^m}.$$

Then, the contribution of one term in the sum (20) is

$$\frac{j!}{e_0! e_1! \dots e_{|P|}!} \frac{i!}{(|P|)! s_1! \dots s_{|P|}!} \|f\|_{C^{|P|+e_0}} \prod_{i=1}^{|P|} \|\kappa\|_{C^{s_i+e_i}} \leq$$
$$\frac{C_f C^{|P|} r^{|P|+e_0} (\frac{r}{4})^{i+j-e_0} R^l (|P|+e_0+l)! i!}{(|P|+e_0+l+1)^m (|P|)! s_1! \dots s_{|P|}!} \frac{j!(s_1+e_1-1)! \dots (s_{|P|}+e_{|P|}-1)!}{e_0! \dots e_{|P|}! (s_1+e_1)^m \dots (s_{|P|}+e_{|P|})^m}.$$

As $e_0 + \dots + e_{|P|} = j$ and $s_1 + \dots + s_{|P|} = i$, and since, as soon as $x \geq 0$, $y \geq 0$, there holds

$$(1+x)(1+y) = 1 + x + y + xy \geq 1 + x + y,$$

one has

$$(|P|+e_0+l+1)^m (s_1+e_1)^m \dots (s_{|P|}+e_{|P|})^m \geq (|P|+j+i+l-|P|+1)^m = (j+i+l+1)^m,$$

so that one can simplify

$$C_f C^{|P|} \frac{r^{|P|+e_0} (\frac{r}{4})^{i+j-e_0} R^l (|P|+e_0+l)! i!}{(|P|+e_0+l+1)^m (|P|)! s_1! \dots s_{|P|}!} \frac{j!(s_1+e_1-1)! \dots (s_{|P|}+e_{|P|}-1)!}{e_0! \dots e_{|P|}! (s_1+e_1)^m \dots (s_{|P|}+e_{|P|})^m}$$
$$\leq C_f C^{|P|} \frac{r^{|P|+e_0} (\frac{r}{4})^{i+j-e_0} R^l (|P|+e_0+l)!}{(j+i+l+1)^m} \frac{i! j! (s_1+e_1-1)! \dots (s_{|P|}+e_{|P|}-1)!}{e_0! (|P|)! s_1! \dots s_{|P|}! e_1! \dots e_{|P|}!}.$$

By Lemma 7.4.3, one has

$$\frac{(s_1+e_1-1)! \dots (s_{|P|}+e_{|P|}-1)!}{s_1! \dots s_{|P|}! e_1! \dots e_{|P|}!} \leq \frac{(i-|P|+j-e_0)!}{(i-|P|+1)!(j-e_0)!}.$$

Hence, the contribution of one term in the sum (20) is smaller than

$$C_f C^{|P|} \frac{i!}{(|P|)!(i-|P|+1)!} \frac{r^{|P|+e_0} (r/4)^{i+j-e_0} R^l (|P|+e_0+l)! j! (i-|P|+j-e_0)!}{(j+i+l+1)^m e_0! (j-e_0)!}.$$

As $(i-|P|+j-e_0)! \le (j-e_0)!(i-|P|)!2^{i+j-e_0}$ and $i! \le 2^i(|P|)!(i-|P|)!$, we control each term in the sum (20) with

$$C_f 2^{e_0-j} C^{|P|} r^i \frac{r^{j+|P|}R^l(|P|+e_0+l)!}{(j+i+l+1)^m} \frac{j!(i-|P|)!}{e_0!}$$
$$\le C_f 2^{e_0-j}(Cr)^i \frac{r^{j+i}R^l(|P|+e_0+l)!}{(j+i+l+1)^m} \frac{j!(i-|P|)!}{e_0!}.$$

There are $\binom{i}{|P|} \le 2^i$ choices for positive $s_1,\dots,s_{|P|}$ such that their sum is i; similarly, there are $\binom{j-e_0+|P|}{|P|} \le 2^{j-e_0+|P|}$ choices for non-negative $e_1,\dots,e_{|P|}$ such that their sum is $j-e_0$. Hence

$$\begin{aligned}
&\|(\nabla_\kappa^i)^{[\le n]} f\|_{\ell^1(C^j)} \\
&\le i^d j^d \sum_{|P|=1}^{\min(n,i)} \sum_{e_0=0}^{j} 2^{j+|P|-e_0} 2^i C_f 2^{e_0-j}(Cr)^i \frac{r^{j+i}R^l(|P|+e_0+l)!}{(j+i+l+1)^m} \frac{j!(i-|P|)!}{e_0!} \\
&\le i^d j^d \sum_{|P|=1}^{\min(n,i)} \sum_{e_0=0}^{j} C_f (4Cr)^i \frac{r^{j+i}R^l(|P|+e_0+l)!}{(j+i+l+1)^m} \frac{j!(i-|P|)!}{e_0!}.
\end{aligned}$$

By Lemma 7.4.1, the terms in the sum above are increasing with respect to e_0, so that

$$\|\nabla_v^i f(x,\kappa(x,v,\overline{z}))_{v=0}\|_{\ell^1(C^j)} \le i^d j^{d+1} \sum_{|P|=1}^{\min(n,i)} C_f (4Cr)^i \frac{r^{j+i}R^l(|P|+j+l)!}{(i+j+l+1)^m}(i-|P|)!.$$

Observe that the quantity in the sum above is log-convex with respect to $|P|$ as it is a product of factorials, so that

$$\begin{aligned}
&\|(\nabla_\kappa^i)^{[\le n]} f\|_{\ell^1(C^j)} \\
&\qquad \le i^{d+1} j^{d+1} C_f \frac{r^{j+i}R^l}{(i+j+l+1)^m}(4Cr)^i \max((n+j+l)!(i-n)!\ ,\ (j+l)!i!)
\end{aligned}$$

if $i \ge n$, and

$$\|(\nabla_\kappa^i)^{[\le n]} f\|_{\ell^1(C^j)} \le i^{d+1} j^{d+1} C_f \frac{r^{j+i}R^l}{(i+j+l+1)^m}(4Cr)^i (i+j+l)!$$

if $i \le n$. This concludes the proof, with $\gamma = 4Cr$. □

We are in position to prove the first part of Theorem 8.2, which does not use the structure of the Bergman kernel. Let us prove that the composition of two covariant Toeplitz operators with analytic symbols also admits an analytic symbol, up to an exponentially small error.

Proposition 8.4.3. *There exists a small neighbourhood U of the diagonal in $M\times M$, and constants C, m_0, r_0 such that, for every $m \ge m_0, r \ge r_0, R \ge Cr^3$, there exists $c' > 0$ such that, for every $f \in S_m^{r,R}(U)$ and $g \in S_m^{2r,2R}(U)$, holomorphic in the first*

variable, anti-holomorphic in the second variable, there exists $f\sharp g \in S_m^{2r,2R}(U)$ *with the same properties, such that*

$$\|T_N^{cov}(f)T_N^{cov}(g) - T_N^{cov}(f\sharp g)\|_{L^2\mapsto L^2} \leq Ce^{-cN}\|g\|_{S_m^{2r,2R}(U)}\|f\|_{S_m^{r,R}(U)}.$$

Moreover

$$\|f\sharp g\|_{S_m^{2r,2R}(U)} \leq C\|g\|_{S_m^{2r,2R}(U)}\|f\|_{S_m^{r,R}(U)}.$$

Remark 8.4.4. One would expect the $\star$ product to be continuous from $S_m^{r,R} \times S_m^{r,R}$ to $S_m^{r,R}$; such a result would imply quite directly the existence of a unit element in this algebra (the Bergman projector), while starting from Proposition 8.4.3 we must give a more complicated proof (whose structure is described in the beginning of Section 8.5). We don't know whether such a result holds for r, R, m large enough.

Proof. The kernel of $T_N^{cov}(f)T_N^{cov}(g)$ can be written as

$$(x,z) \mapsto \Psi^N(x,z)\int_{y\in M} e^{N\Phi_1(x,y,\overline{y},z)}\left(\sum_{k=0}^{cN} N^{d-k}f_k(x,\overline{y})\right)\left(\sum_{j=0}^{cN} N^{d-j}g_j(y,\overline{z})\right)\mathrm{d}y.$$

Here, and until the end of the proof, we write $f_k(x,\overline{y})$ to indicate that f_k is holomorphic in the first variable and anti-holomorphic in the second variable. We similarly write $g_j(y,\overline{z})$.

Since Φ_1 is an analytic phase (Proposition 8.3.1), let us apply the stationary phase lemma (Proposition 7.3.3). There exists a biholomorphism on a neighbourhood of x in $\widetilde{M}$, of the form

$$\kappa_{(x,\overline{z})} : (y,\overline{y}) \mapsto v(x,y,\overline{y},\overline{z}),$$

with holomorphic dependence on $(x,\overline{z})$ (that is, holomorphic in x and antiholomorphic in z), in which the phase Φ_1 can be written as $-|v|^2$. In particular,

$$v(x,x,\overline{z},\overline{z}) = 0.$$

Let J denote the Jacobian of this change of variables. Then

$$\begin{aligned}&T_N^{cov}(f)T_N^{cov}(g)(x,z)\\ &= \Psi^N(x,z)\sum_{k=0}^{\dots}\sum_{j=0}^{\dots}\sum_{n=0}^{\dots} N^{d-k-j-n}\frac{\Delta_v^n}{n!}(f_k(x,\overline{y}(x,v,\overline{z}))g_j(y(x,v,\overline{z}),\overline{z})J(x,v,\overline{z}))_{v=0}\\ &\qquad\qquad\qquad\qquad\qquad\qquad\qquad\qquad\qquad\qquad\qquad\qquad + \dots\end{aligned}$$

We will make sense of this sum later on; that is, prove that one can sum until k, j or n is equal to cN, up to an exponentially small error. For the moment, let us treat this formula in decreasing powers of N. Writing

$$T_N^{cov}(f)T_N^{cov}(g)(x,z) = T_N^{cov}(f\sharp g)(x,\overline{z}) = \Psi^N(x,z)\sum_{k=0}^{\dots} N^{d-k}(f\sharp g)_k(x,\overline{z}) + \dots$$

the symbol $f\sharp g$ must be holomorphic in the first variable, anti-holomorphic in the second variable, and such that

$$(f\sharp g)_k(x,\overline{z}) = \sum_{n=0}^{k}\frac{\Delta_v^n}{n!}\left(\sum_{l=0}^{k-n} f_l(x,\overline{y}(x,v,\overline{z}))g_{k-n-l}(y(x,v,\overline{z}),\overline{z})J(x,v,\overline{z})\right)_{v=0}.$$

Here the Laplace operator acts on v.

The proof proceeds now in three steps. In the first step, we write a control of the formal symbol $f\sharp g$ using the analytic symbol structure of f and g and Lemma 8.4.2. This control involves a complicated quotient of factorials as well as a rational expression similar to the one appearing in Lemma 7.2.7. The second step is a control the quotients of factorials, thus reducing the proof that $f\sharp g \in S_m^{2r,2R}$ to Lemma 7.2.7. In the third step we prove that, when identifying between $T_N^{cov}(f)T_N^{cov}(g)$ and $T_N^{cov}(f\sharp g)$, one can perform analytic sums, so that the remainder is exponentially small.

First step.

We wish to control $\|(f\sharp g)_k\|_{C^j(U)}$, which amounts to control, for

$$0 \leq n \leq k, 0 \leq l \leq k-n,$$

the C^j-norm of

$$(x,z) \mapsto \Delta_v^n(f_l(x,\overline{y}(x,v,\overline{z}))g_{k-n-l}(y(x,v,\overline{z}),\overline{z})J(x,v,\overline{z}))_{v=0}.$$

This bidifferential operator acting on f_l and g_{k-n-l} coincides, up to a multiplicative factor, with the operator B_n considered in Proposition 8.4.1. Indeed, if $f = f_0$ and $g = g_0$, then

$$(f\sharp g)_k(x,\overline{z}) = \frac{\Delta_v^k}{k!}(f_0(x,\overline{y}(x,v,\overline{z}))g_0(y(x,v,\overline{z}))J(x,v,\overline{z}))_{v=0} = B_k(f_0,g_0),$$

where $(B_k)_{k\geq 0}$ is the sequence of bidifferential operators appearing in Proposition 8.4.1. In particular, when expanding

$$\Delta_v^n(f_l(x,\overline{y}(x,v,\overline{z}))g_{k-n-l}(y(x,v,\overline{z}),\overline{z})J(x,v,\overline{z}))_{v=0},$$

using the Leibniz and Faà di Bruno formulas, no derivative of f_l and g_{k-n-l} of order greater than n will appear. Let us write this expansion.

Until the end of the proof, C^j or analytic norms of functions are implicitly on the domain U or $U \times U$.

For every $n \in \mathbb{N}$, by the multinomial formula, there holds

$$\Delta_v^n = \left(\sum_{i=1}^{2d} \frac{\partial^2}{\partial v_j^2}\right)^n = \sum_{\substack{\mu\in\mathbb{N}^{2d}\\ |\mu|=n}} \frac{n!}{\mu!}\partial_v^{2\mu}.$$

Applying the generalised Leibniz rule twice, one has then

$$\begin{aligned}\Delta_v^n&(f_l(x,\overline{y}(x,v,\overline{z}))g_{k-n-l}(y(x,v,\overline{z}),\overline{z})J(x,v,\overline{z}))_{v=0}\\ &= \sum_{\substack{|\mu|=n\\ \nu_1+\nu_2\leq 2\mu}} \frac{n!(2\mu)!}{\mu!\nu_1!\nu_2!(2\mu-\nu_1-\nu_2)!}\partial_v^{\nu_1} f_l(x,\overline{y}(x,v,\overline{z}))_{v=0}\\ &\qquad\qquad \times \partial_v^{\nu_2} g_{k-n-l}(y(x,v,\overline{z}),\overline{z})_{v=0}\partial_v^{2\mu-\nu_1-\nu_2}J_{v=0}.\end{aligned}$$

By Proposition 8.4.1, in the formula above one can replace $\partial_v^{\nu_1} f(x,\overline{y}(x,v,\overline{z}))_{v=0}$ by its truncation into a differential operator of degree less than n, applied on f, which

we denote $(\partial_\kappa^{\nu_1})^{[\le n]} f(x,\overline{z})$ (similarly as in Lemma 8.4.2). Similarly one can replace $\partial_v^{\nu_2} g(y(x,v,\overline{z}),\overline{z})_{v=0}$ by $(\partial_\kappa^{\nu_2})^{[\le n]} g(x,\overline{z})$. Then

$$\Delta_v^n(f_l(x,\overline{y}(x,v,\overline{z}))g_{k-n-l}(y(x,v,\overline{z}),\overline{z})J(x,v,\overline{z}))_{v=0} = \sum_{\substack{|\mu|=n\\ \nu_1+\nu_2\le 2\mu}} \frac{n!(2\mu)!}{\mu!\nu_1!\nu_2!(2\mu-\nu_1-\nu_2)!}(\partial_\kappa^{\nu_1})^{[\le n]} f_l(x,\overline{z})(\partial_\kappa^{\nu_2})^{[\le n]} g_{k-n-l}(x,\overline{z}) \times \partial_v^{2\mu-\nu_1-\nu_2} J_{v=0}(x,\overline{z}),$$

with, by Lemma 7.4.2,

$$\begin{aligned}\frac{n!\mu_1!}{\nu_1!\nu_2!(2\mu-\nu_1-\nu_2)!} &= \frac{n!}{\mu!}\frac{(2\mu)!}{\nu_1!(2\mu-\nu_1)!}\frac{(2\mu-\nu_1)!}{\nu_2!(2\mu-\nu_1-\nu_2)!}\\ &\le \frac{n!}{\mu!}\frac{(2n)!}{|\nu_1|!(2n-|\nu_1|)!}\frac{(2n-|\nu_1|)!}{|\nu_2|!(2n-|\nu_1|-|\nu_2|)!}\\ &= \frac{n!}{\mu!}\binom{2n}{|\nu_1|,|\nu_2|} \le (2d)^n\binom{2n}{|\nu_1|,|\nu_2|}.\end{aligned}$$

Moreover, applying Proposition 7.2.2 twice,

$$\begin{aligned}&\|(\partial_\kappa^{\nu_1})^{[\le n]} f_l(x,\overline{z})(\partial_\kappa^{\nu_2})^{[\le n]} g_{k-n-l}(x,\overline{z})\partial_v^{2\mu-\nu_1-\nu_2} J_{v=0}\|_{C^j}\\ &\quad\le \sum_{j_1+j_2\le j}\binom{j}{j_1,j_2}\|(\partial_\kappa^{\nu_1})^{[\le n]} f_l(x,\overline{z})\|_{C^{j_1}}\|(\partial_\kappa^{\nu_2})^{[\le n]} g_{k-n-l}(x,\overline{z})\|_{C^{j_2}}\\ &\qquad\times \|\partial_v^{2\mu-\nu_1-\nu_2} J_{v=0}\|_{C^{j-j_1-j_2}}.\end{aligned}$$

In particular, using the notation $(\nabla_\kappa^j)^{[\le n]}$ as introduced in Lemma 8.4.2, one has

$$\begin{aligned}\|n!B_n(f_l,g_{k-n-l})\|_{C^j} &= \|\Delta_v^n(f_l(x,\overline{y}(x,v,\overline{z}))g_{k-n-l}(y(x,v,\overline{z}),\overline{z})J(x,v,\overline{z}))_{v=0}\|_{C^j}\\ &\le (2d)^n\sum_{\substack{j_1+j_2\le j\\ i_1+i_2\le 2n}}\binom{j}{j_1,j_2}\binom{2n}{i_1,i_2}\|(\nabla_\kappa^{i_1})^{[\le n]} f_l(x,\overline{z})\|_{\ell^1(C^{j_1})}\\ &\qquad\|(\nabla_\kappa^{i_2})^{[\le n]} g_{k-n-l}(x,\overline{z})\|_{\ell^1(C^{j_2})}\|\nabla_v^{2n-i_1-i_2} J\|_{\ell^1(C^{j-j_1-j_2})}.\end{aligned}$$

By Lemma 8.4.2, for some γ_r depending linearly on r (but independent of R,m), one has

$$\|(\nabla_\kappa^{i_1})^{[\le n]} f_l(x,\overline{z})\|_{\ell^1(C^{j_1})} \le i_1^{d+1}j_1^{d+1}\|f\|_{S_m^{r,R}}\gamma_r^{i_1}\frac{r^{j_1+i_1}R^l}{(i_1+j_1+l+1)^m}A(i_1,j_1,l,n),$$

and

$$\begin{aligned}&\|(\nabla_\kappa^{i_2})^{[\le n]} g_{k-n-l}(x,\overline{z})\|_{\ell^1(C^{j_2})}\\ &\qquad\le i_2^{d+1}j_2^{d+1}\|g\|_{S_m^{2r,2R}}\gamma_r^{i_2}\frac{(2r)^{j_2+i_2}(2R)^{k-n-l}}{(i_2+j_2+l+1)^m}A(i_2,j_2,k-n-l,n),\end{aligned}$$

where

$$A(i,j,l,n) = \begin{cases}(i+j+l)! & \text{if } i\le n,\\ \max((n+j+l)!(i-n)!,(j+l)!i!) & \text{otherwise,}\end{cases}$$

The real-analytic function J belongs to some fixed analytic space, so that there exists r_0, m_0 such that.

$$\|J\|_{C^j} \leq C_J \frac{r_0^j j!}{(j+1)^{m_0}},$$

If $r \geq 2r_0 2^{m-m_0}$, by Proposition 7.1.11, one has

$$\|J\|_{C^j} \leq C_J \frac{(r/2)^j j!}{(j+1)^m},$$

hence

$$\|(f\sharp g)_k\|_{C^j} \leq$$
$$C_J \|f\|_{S_m^{r,R}} \|g\|_{S_m^{2r,2R}} \frac{(2r)^j (2R)^k (j+k)!}{(k+j+1)^m} \sum_{n=0}^{k} \left(\frac{\gamma_r r^2}{R}\right)^n \sum_{l=0}^{k-n} \sum_{i_1+i_2\leq 2n} \sum_{j_1+j_2\leq j}$$
$$\frac{(2n)! j! A(i_1,j_1,l,n) A(i_2,j_2,k-l,n)(2n+j-j_1-j_2-i_1-i_2)!}{2^{2n+j-j_1-j_2-i_1-i_2} 2^{j_1+i_1+l} i_1! i_2! j_1! j_2! (2n-i_1-i_2)! (j-j_1-j_2)! n! (k+j)!}$$
$$\frac{i_1^d i_2^d j_1^d j_2^d (k+j+1)^m}{(j_1+i_1+l+1)^m (j_2+i_2+k-n-l+1)^m (j+2n-i_1-i_2-j_1-j_2+1)^m}.$$

Second step.
Let us control the quotient of factorials above. There holds

$$\frac{(2n+j-j_1-j_2-i_1-i_2)!}{2^{2n+j-j_1-j_2-i_1-i_2}(j-j_1-j_2)!(2n-i_1-i_2)!} = \frac{\binom{2n+j-j_1-j_2-i_1-i_2}{j-j_1-j_2}}{2^{2n+j-j_1-j_2-i_1-i_2}} \leq 1.$$

Thus, the middle line in the control on $\|(f\sharp g)_k\|_{C^j}$ is smaller than

$$\frac{(2n)! j! A(i_1,j_1,l,n) A(i_2,j_2,k-l,n)}{2^{j_1+i_1+l} i_1! i_2! j_1! j_2! n! (k+j)!}.$$

Let us prove that, if $i_1 \leq 2n$, $i_2 \leq 2n$, $0 \leq l \leq k-n$, $j_1+j_2 \leq j$, then

$$\frac{(2n)! j! A(i_1,j_1,l,n) A(i_2,j_2,k-l,n)}{2^{j_1+i_1+l} i_1! i_2! j_1! j_2! n! (k+j)!} \leq 4^n.$$

For the moment, let us focus on the $i_1 \leq n, i_2 \leq n$ case. As $i_1 \geq 0$ one has $\frac{1}{2^{i_1}} \leq 1$ and it remains to control

$$\frac{(2n)! j! (j_1+i_1+l)! (j_2+i_2+k-n-l)!}{2^{j_1+l} i_1! i_2! j_1! j_2! n! (k+j)!}.$$

This expression is increasing with respect to i_1 and i_2, so that we only need to control the $i_1 = i_2 = n$ case, which is

$$\frac{(2n)! j! (j_1+n+l)! (j_2+k-l)!}{2^{j_1+l} (n!)^3 j_1! j_2! (k+j)!}$$

Moreover, the expression above is log-convex with respect to l, so that we only need to control the $l = 0$ and $l = k-n$ case.

If $l = 0$ we are left with

$$\frac{(2n)!j!(j_1+n)!(k+j_2)!}{2^{j_1}(n!)^3 j_1! j_2!(k+j)!} = 2^n \binom{2n}{n} \frac{\binom{j_1+n}{n}}{2^{j_1+n}} \frac{\binom{k+j+j_2}{j_2}}{\binom{k+j+j_2}{j}} \leq 4^n \frac{\binom{k+j+j_2}{j_2}}{\binom{k+j+j_2}{j}}.$$

To conclude, j is closer from $\dfrac{k+j+j_2}{2}$ than j_2 since $j \geq j_2$, so that $\frac{\binom{k+j+j_2}{j_2}}{\binom{k+j+j_2}{j}} \leq 1$, hence the claim.

If $l = k - n$, one has

$$\frac{(2n)!j!(j_1+k)!(j_2+n)!}{2^{j_1+k-n}(n!)^3 j_1! j_2!(k+j)!} = 2^n \binom{2n}{n} \frac{\binom{j_1+k}{k}}{2^{j_1+k}} \frac{\binom{j_2+n}{n}}{\binom{j+k}{k}} \leq 4^n.$$

We now consider the case $i_1 \geq n$ or $i_2 \geq n$. We need to replace $(i_1+j_1+l)!$ with either $(j_1+l)!i_1!$ or $(j_1+l+n)!(i_1-n)!$. By Proposition 7.4.1, one has

$$\frac{(j_1+l)!i_1!}{i_1!} = (j_1+l)! \leq \frac{(j_1+l+n)!}{n!}$$
$$\frac{(j_1+l+n)!(i_1-n)!}{i_1!} \leq \frac{(j_1+l+n)!i_1!}{i_1!n!} = \frac{(j_1+l+n)!}{n!}.$$

The same inequalities apply with i_1, j_1 replaced with i_2, j_2. Hence, in all cases, we are left with

$$\frac{(2n)!j!(j_1+n+l)!(j_2+k-l)!}{2^{j_1+l}(n!)^3 j_1! j_2!(k+j)!},$$

which we just proved to be smaller than 4^n.

This yields

$$\begin{aligned}
&\|(f\sharp g)_k\|_{C^j} \\
&\leq C_J \|f\|_{S_m^{r,R}} \|g\|_{S_m^{2r,2R}} \frac{(2r)^j (2R)^k (j+k)!}{(k+j+1)^m} \sum_{n=0}^{k} \left(\frac{4\gamma_r r^2}{R}\right)^n \sum_{l=0}^{k-n} \sum_{i_1,i_2=0}^{n} \sum_{j_1+j_2\leq j} \\
&\frac{(k+j+1)^m i_1^d i_2^d j_1^d j_2^d}{(j_1+i_1+l+1)^m (j_2+i_2+k-n-l+1)^m (j+2n-i_1-i_2-j_1-j_2+1)^m}.
\end{aligned}$$

We are almost in position to apply Lemma 7.2.7; since

$$(k+j+n+1)^m \geq (k+j+1)^m,$$

one has

$$\begin{aligned}
&\|(f\sharp g)_k\|_{C^j} \\
&\leq C_J \|f\|_{S_m^{r,R}} \|g\|_{S_m^{2r,2R}} \frac{(2r)^j (2R)^k (j+k)!}{(k+j+1)^m} \sum_{n=0}^{k} \left(\frac{4\gamma_r r^2}{R}\right)^n \sum_{l=0}^{k-n} \sum_{i_1,i_2=0}^{n} \sum_{j_1+j_2\leq j} \\
&\frac{i_1^d i_2^d j_1^d j_2^d (k+j+n+1)^m}{(j_1+i_1+l+1)^m (j_2+i_2+k-n-l+1)^m (j+2n-i_1-i_2-j_1-j_2+1)^m}.
\end{aligned}$$

Applying Lemma 7.2.7 yields, for m large enough depending on d,

$$\|(f\sharp g)_k\|_{C^j} \leq C_J \|f\|_{S_m^{r,R}} \|g\|_{S_m^{2r,2R}} \frac{(2r)^j (2R)^k (j+k)!}{(k+j+1)^m} \sum_{n=0}^{k} \left(\frac{4\gamma_r r^2}{R}\right)^n.$$

As long as $R \geq 4\gamma_r r^2$, which is possible if R is chosen large enough since γ_r depends only on r, one can conclude:

$$\|(f\sharp g)_k\|_{C^j} \leq 2^m C_J \|f\|_{S_m^{r,R}} \|g\|_{S_m^{2r,2R}} \frac{(2r)^j (2R)^k (j+k)!}{(k+j+1)^m}.$$

At this stage, we are almost done with the proof: we obtained that the formal series which corresponds, in the C^∞ class, to the composition $T_N^{cov}(f)T_N^{cov}(g)$, belongs to the same analytic symbol class than g.

Third step.

It remains to prove that computing symbol sums in decreasing powers of N, up to an order cN for $c > 0$ small, yields an exponentially small error.

Let $c > 0$ be small enough depending on r, R, m. The analytic sums $f(N)$ and $g(N)$ appearing in $T_N^{cov}(f)$ and $T_N^{cov}(g)$ can be replaced, by Proposition 7.2.6, by a sum until cN, up to a small error $O(e^{-c'N})$ with $c' > 0$. Then, by construction,

$$\begin{aligned}\left[T_N^{cov}\left(\sum_{k=0}^{cN} N^{d-k} f_k\right) T_N^{cov}\left(\sum_{k=0}^{cN} N^{d-k} g_k\right) - T_N^{cov}\left(\sum_{k=0}^{cN} N^{d-k}(f\sharp g)_k\right)\right](x,z) \\ = \int_M \Psi^N(x,y)\Psi^N(y,z) \sum_{j=0}^{cN} \sum_{k=cN-j}^{cN} N^{2d-j-k} f_j(x,\overline{y}) g_k(y,\overline{z}) \mathrm{d}y \\ + \sum_{j+k\leq cN} N^{-k-j} R(j,k,N).\end{aligned}$$

Here, $R(j,k,N)$ is the remainder at order $cN-k-j$ in the stationary phase Lemma applied to

$$N^{2d}\Psi^N(x,z) \int_{y\in M} e^{-N\Phi_1(x,y,\overline{y},\overline{z})} f_j(x,\overline{y}) g_k(y,\overline{z}) \mathrm{d}y.$$

As

$$\begin{aligned}\|f_j\|_{C^l} &\leq C_f (4R)^j j! \frac{(4r)^l l!}{(j+l+1)^m} \leq C_f (4R)^j j! \frac{(4r)^l l!}{(l+1)^m} \\ \|g_k\|_{C^l} &\leq C_g (4R)^k k! \frac{(4r)^l l!}{(k+l+1)^m} \leq C_g (4R)^k k! \frac{(4r)^l l!}{(l+1)^m},\end{aligned}$$

one has, by Lemma 7.1.13,

$$\|f_j g_k\|_{C^l} \leq C C_f C_g (4R)^{j+k} j! k! \frac{(4r)^l l!}{(l+1)^m}.$$

In other terms,

$$\|f_j g_k\|_{H(m,4r,U\times U)} \leq C C_f C_g (8R)^{j+k} (j+k)!,$$

so that, by Proposition 7.3.3, for some $c' > 0$ depening on r, one has

$$\begin{aligned}N^{-k-j}|R(j,k,N)| &\leq N^{2d} C C_f C_g N^{-k-j} (4R)^{j+k} j! k! e^{-c'(cN-j-k)} \\ &\leq N^{2d} C C_f C_g N^{-k-j} (8R)^{j+k} (j+k)! e^{-c'(cN-j-k)}.\end{aligned}$$

We must estimate this quantity in the range $0 \leq j+k \leq cN$. Observe that, if $j+k-1$ is replaced with $j+k$, then the right-hand term is multiplied by

$$\frac{8R}{N}(j+k)e^{c'} \leq 8Rce^{c'}.$$

If $c > 0$ is chosen small enough then this ratio is smaller than 1, so that it suffices to estimate the $k+j=0$ case, for which it is $O(\exp(-(c'-\epsilon)cN))$.

Since $|\Psi^N| \leq 1$ on U, it remains to estimate

$$\sum_{j=0}^{cN} \sum_{k=cN-j}^{cN} N^{2d-j-k} \sup(|f_j|) \sup(|g_k|),$$

which is smaller than (with $l = k+j$):

$$C_f C_g N^{2d+1} \sum_{l=cN}^{2cN} N^{-l}(2R)^l l!.$$

Let $l/N = \tilde{c} \in [c, 2c]$. Then, by the Stirling formula, one has

$$\begin{aligned} N^{-l}(2R)^l l! &\leq C\sqrt{l}\exp[-l\log(N) + l\log(2R) + l\log(l) - l] \\ &= C\sqrt{l}\exp\left[-\frac{e}{2R}N\left(-\frac{2Rl}{eN}\log\left(\frac{2Rl}{eN}\right)\right)\right]. \end{aligned}$$

If $c > 0$ is small enough then $\frac{4Rc}{e} < 1$, so that $-\frac{2Rl}{eN}\log(\frac{2Rl}{eN})$ is bounded away from zero independently of N for $l \in [cN, 2cN]$. In particular, there exists $c' > 0$ such that

$$N^{-l}(2R)^l l! \leq C\sqrt{N}\exp(-c'N).$$

Hence, if $c'' < c'$, then

$$N^{2d} \sum_{j=0}^{cN} \sum_{k=cN-j}^{cN} N^{-j-k} \sup(|f_j|) \sup(|g_k|) = O(e^{-c''N}).$$

This concludes the proof. □

8.5 Inversion of covariant Toeplitz operators and the Bergman kernel

In this subsection we prove Theorem 8.1 as well as the second part of Theorem 8.2. To do so, we first show in Proposition 8.5.1, as a reciprocal to Proposition 8.4.3, that if f and h are analytic symbols of covariant Toeplitz operators with f_0 non-vanishing, then there exists an analytic symbol g such that

$$T_N^{cov}(f)T_N^{cov}(g) = T_N^{cov}(h) + O(e^{-cN}).$$

We then prove in Proposition 8.5.2 that, under the same hypotheses, $T_N^{cov}(f)$, whose image is almost contained in $H^0(M, L^{\otimes N})$ by Proposition 8.2.3, is invertible on

this space up to an exponentially small error. Thus, one can conclude that, on $H^0(M, L^{\otimes N})$, there holds

$$T_N^{cov}(g) = T_N^{cov}(h)(T_N^{cov}(f))^{-1} + O(e^{-cN}).$$

This allows us to prove Theorem 8.1, since by setting $h = f$ one recovers that the Bergman kernel can be written as $T_N^{cov}(f)(T_N^{cov}(f))^{-1} = T_N(a)$. Then, the second part of Theorem 8.2 follows from Proposition 8.5.1 by setting $h = a$.

Following the lines of Proposition 8.4.3, let us try to construct inverses for analytic symbols.

Proposition 8.5.1. *Let U denote a small neighbourhood of the diagonal in $M \times M$ and let $f, h \in S_{m_0}^{r_0,R_0}(U)$ be analytic symbols, holomorphic in the first variable and anti-holomorphic in the second variable, for some r_0, R_0, m_0. Suppose that the principal symbol f_0 of f is bounded away from zero on U.*

Then there exists r, R, m as well as $g \in S_m^{r,R}(U)$, holomorphic in the first variable, anti-holomorphic in the second variable, such that

$$T_N^{cov}(f)T_N^{cov}(g) = T_N^{cov}(h) + O(e^{-cN}).$$

Proof. Recalling the proof of Proposition 8.4.3, let us recover g from f and $h = f\sharp g$. By definition of h_k, one has

$$\begin{aligned} &g_k(x,\overline{z})f_0(x,\overline{z})J(x,x,\overline{z},\overline{z}) \\ &\quad = h_k(x,\overline{z}) - \sum_{n=0}^{k} \frac{\Delta_v^n}{n!}\left(\sum_{\substack{l=0\\ l+n>0}}^{k-n} f_l(x,\overline{y}(x,v,\overline{z}))g_{k-n-l}(y(x,v,\overline{z}),\overline{z})J(x,v,\overline{z})\right)_{v=0}. \end{aligned} \tag{21}$$

As f_0 is bounded away from zero, this indeed defines g_k by induction. Let us try to control g in an analytic space.

We first let m large enough, and $r \geq 2r_0 2^{m-m_0}$ as well as $R \geq 2R_0 2^{m-m_0}$. Then, by Lemma 7.2.4, there exist C_f, C_h, C_J independent of m, r, R such that, for every $k \geq 0, j \geq 0$,

$$\begin{aligned} \|f_k\|_{C^j(U)} &\leq C_f \frac{(r/2)^j (R/2)^k (j+k)!}{(j+k+1)^m} \\ \|h_k\|_{C^j(U)} &\leq C_h \frac{r^j r^k (j+k)!}{(j+k+1)^m} \\ \|J\|_{C^j(U\times U)} &\leq C_J \frac{(r/2)^j j!}{(j+1)^m}. \end{aligned}$$

Here J denotes again the Jacobian in the change of variables corresponding to the Morse lemma for the phase Φ_1.

We first note that

$$g_0(x,\overline{z}) = f_0(x,\overline{z})^{-1} h_0(x,\overline{z}) J(x,x,\overline{z},\overline{z}),$$

so that, by Lemma 7.1.13, there exists C_0 such that, for every $r \geq 2r_0 2^{m-m_0}$ and $R \geq 2R_0 2^{m-m_0}$, for every $j \geq 0$,

$$\|g_0\|_{C^j(U)} \leq C_0 \frac{r^j j!}{(j+1)^m}.$$

Let us prove by induction on $l \geq 1$ that, for some fixed C_g, m, r, R, for every $j \geq 0$, one has

$$\|g_l\|_{C^j} \leq C_g \frac{r^j R^l (j+l)!}{(j+l+1)^m}.$$

Over the course of the induction, we will fix the values of C_g, m, r, R.

Suppose that a control above is true for indices up to $l = k-1$. Then, from the recursive formula (21), if we repeated the proof of Proposition 8.4.3, we would obtain

$$\|g_k\|_{C^j} \leq C(C_h + C_g C_f C_J) \frac{r^j R^k (j+k)!}{(j+k+1)^m}.$$

This is not enough, as the constant $C(C_h + C_g C_f C_J)$ appearing here might be greater than C_g. However, as we will see, the constant can be made arbitrarily small by choosing C_g large enough, as well as m large enough, depending on f, and R/r^2 large enough.

Let $C_1 = C\|(f_0 J)^{-1}\|_{H(m,r,U)}$ where C is the constant appearing in Proposition 7.1.13.

There holds

$$C_h \leq \frac{C_g}{4C_1}$$

if C_g is large enough with respect to C_h, C_f, C_J, C_0. It remains to estimate the second term on the right-hand side of (21).

Let us isolate the $n = 0, l = k$ term in (21). This term is $-g_0 J f_k$, and the $S_m^{r,R}(U)$-norm of $g_0 J f$ is again smaller than $\frac{C_g}{4C_1}$ if C_g is large enough with respect to $C_f C_0 C_J$.

Repeating the proof of Proposition 8.4.3, the $n = 0, l < k$ terms in (21) are bounded in C^j-norm by

$$CC_J C_f C_g \frac{r^j R^k (j+k)!}{(j+k+1)^m} \times \sum_{l=1}^{k-1} \sum_{j_1+j_2 \leq j} \frac{(j+k+1)^m}{(j_1+l+1)^m (j_2+k-l+1)^m (j-j_1-j_2+1)^m}.$$

By Lemma 7.2.7, since no term in the sum

$$\sum_{\substack{1 \leq l \leq k-1 \\ j_1+j_2 \leq j}} \frac{(j+k+1)^m}{(j_1+l+1)^m (j_2+k-l+1)^m (j-j_1-j_2+1)^m} \leq \sum_{\substack{i_1+i_2+i_3=j+k \\ i_1 \geq 1 \\ i_2 \geq 1}} \frac{(j+k+1)^m}{(i_1+1)^m (i_2+1)^m (i_3+1)^m}$$

contribute as 1, by Lemma 7.2.7 (with $d = 0$ and $n = 3$), this sum is smaller than $C(3/4)^m$ for some $C > 0$. Hence, if m is large enough, this contribution is also smaller than $\frac{C_g}{4C_1}$. Now m is fixed.

It remains to control the $n \geq 1$ terms in (21). From the proof of Proposition 8.4.3, their sum is smaller than

$$CC_J C_f C_g \sum_{n=1}^{k} \frac{r^j R^k (j+k)!}{(j+k+1)^m} \left(\frac{4\gamma_r r^2}{R} \right)^n.$$

As long as R/r^2 is large enough with respect to $\gamma_r C_J C_f$, (which is possible if R is large enough since $\gamma_r = Cr$ for some fixed C), this is again smaller than $\frac{C_g}{4C_1}$.

In conclusion,

$$\|g_k f_0 J\|_{C^j} \leq \frac{C_g}{C_1} \frac{r^j R^k (j+k)!}{(j+k+1)^m}.$$

In particular, by Lemma 7.1.13, and since $\|(f_0 J)^{-1}\|_{H(m,r,U)} = C_1/C$, one has

$$\|g_k\|_{C^j} = \|g_k f_0 J (f_0 J)^{-1}\|_{C^j} \leq C_g \frac{r_j R^k (j+k)!}{(j+k+1)^m}.$$

This concludes the induction.

Once the formal series g is controlled in an analytic symbol space, the composition $T_N(g)T_N(f)$ coincides with $T_N(h)$ up to an exponentially small error as in the end of the proof of Proposition 8.4.3, hence the claim. □

Proposition 8.5.2. *Let f be a function on U, holomorphic with respect to the first variable, anti-holomorphic with respect to the second variable. If f is nonvanishing then $S_N T_N^{cov}(f)$ has an inverse on $H^0(M, L^{\otimes N})$, with operator norm bounded independently of N.*

Proof. One can invert $S_N T_N^{cov}(f)$ by a formal covariant symbol, that is, up to an $O(N^{-K})$ error for any fixed K. In particular, there exists an operator A_N, from $H^0(M, L^{\otimes N})$ to itself, such that

$$A_N S_N T_N^{cov}(f) = S_N + O(N^{-1}),$$

and such that the operator norm of A_N is bounded independently on N.

Since $A_N S_N T_N^{cov}(f)$ is invertible on $H^0(M, L^{\otimes N})$, so is $S_N T_N^{cov}(f)$, and the operator norm of this inverse is $\|A_N\|_{L^2 \to L^2}(1+O(N^{-1}))$, which is bounded independently on N, hence the claim. □

Let us now conclude the proofs of Theorems 8.1 and 8.2.

Let U be a small neighbourhood of the diagonal in $M \times M$ and let f be any function on U bounded away from zero, holomorphic in the first variable, anti-holomorphic in the second variable. From Proposition 8.5.1 there exists an analytic symbol a with the same properties, such that

$$T_N^{cov}(f) T_N^{cov}(a) = T_N^{cov}(f) + O(e^{-cN}).$$

Let $A_N = (S_N T_N^{cov}(f))^{-1}$ on $H^0(M, L^{\otimes N})$; from Proposition 8.5.2, A_N is well-defined and bounded independently on N. Then, for any $u \in H^0(M, L^{\otimes N})$, one has

$$T_N^{cov}(a) u = u + O(e^{-cN}).$$

Moreover, by Proposition 8.2.3, there holds

$$(I - S_N) T_N^{cov}(a) = O(e^{-cN}).$$

To conclude, one has $T_N^{cov}(a) = S_N + O(e^{-cN})$. In other terms,

$$S_N(x, \overline{y}) = \Psi^N(x, y) \sum_{k=0}^{cN} N^{d-k} a_k(x, \overline{y}) + O(e^{-cN}).$$

This concludes the proof of Theorem 8.1.

Let us complete the proof of Theorem 8.2. Its first part is Proposition 8.4.3. For the second part, we apply Proposition 8.5.1 with $h = a$, the symbol of the Bergman kernel.

Remark 8.5.3 (Normalised covariant Toeplitz operators)**.** Let $T_N^{cov}(a)$ denote the approximate Bergman kernel constructed in the previous proposition. Once the symbol a is known, one can study, as in the proof of Proposition 8.4.1, *normalised covariant* Toeplitz operators, of the form

$$\Psi^N(x,y)\left(\sum_{k=0}^{cN} N^{-k} a_k(x,\overline{y})\right)\left(\sum_{k=0}^{cN} N^{d-k} f_k(x,\overline{y})\right).$$

Under this convention, the operator associated with the function $f = 1$ is S_N up to $O(e^{-cN})$, as in contravariant Toeplitz quantization.

Propositions 8.4.3 and 8.5.1 can be adapted to normalised covariant Toeplitz operators, for which the algebra product is

$$(f,g) \mapsto ((f * a)\sharp(g * a)) * a^{*-1}.$$

For instance, since the Cauchy product is continuous on each symbol class, there holds, for m large enough, $r > 2^m$ and $R > Cr^3$,

$$\|((f * a)\sharp(g * a)) * a^{*-1}\|_{S_m^{2r,2R}(U)} \leq C_a \|f\|_{S_m^{r,R}(U)} \|g\|_{S_m^{2r,2R}(U)}.$$

To conclude this section, we prove that analytic contravariant Toeplitz opeartors are contained within analytic covariant Toeplitz operators.

Proposition 8.5.4. *Let f be a real-analytic function on M. There exists an analytic symbol g and $c > 0$ such that*

$$T_N(f) = T_N^{cov}(g) + O(e^{-cN}).$$

Proof. Recall from Theorem 8.1 that there exists an analytic symbol a such that

$$S_N = T_N^{cov}(a) + O(e^{-cN}).$$

Letting $\widetilde{f}$ be a holomorphic extension of f, the kernel of $T_N(f) = S_N f S_N$ is then

$$(x,z) \mapsto$$
$$\Psi^N(x,z)\int_{y\in M} e^{-N\Phi_1(x,y,\overline{y},\overline{z})}\left(\sum_{k=0}^{cN} N^{d-k} a_k(x,\overline{y})\right)\left(\sum_{k=0}^{cN} N^{d-k} a_k(y,\overline{z})\right)\widetilde{f}(y,\overline{y})\mathrm{d}y + O(e^{-cN}).$$

One can then repeat the proof of Proposition 8.4.3 with J replaced with

$$(x,y,\overline{y},\overline{z}) \mapsto J(x,y,\overline{y},z)\widetilde{f}(y,\overline{y}).$$

This yields an analytic symbol g such that

$$g_k(x,\overline{z}) = \sum_{n=0}^{k} \frac{\widetilde{\Delta}_v^n}{n!}\Bigg(\sum_{l=0}^{k-n} a_l(x,\overline{y}(x,v,\overline{z})a_{k-n-l}(y(x,v,\overline{z}),\overline{z})$$
$$J(x,(y,\overline{y})(x,v,\overline{z}),\overline{z})\widetilde{f}((y,\overline{y})(x,v,\overline{z}))\Bigg)_{v=0},$$

that is,

$$T_N^{cov}(g) = S_N f S_N + O(e^{-cN}).$$

□

8.6 Exponential decay of low-energy states

Since covariant analytic Toeplitz operators form an algebra up to exponentially small error terms (Theorem 8.2), and since contravariant Toeplitz operators are a subset of covariant analytic Toeplitz operators (Proposition 8.5.4), one can study exponential localisation for eigenfunctions of contravariant analytic Toeplitz operators. In this subsection we prove Theorem 8.3.

Let f be a real-analytic, real-valued fnuction on M, let $E \in \mathbb{R}$ and let $(u_N)_{N\geq 1}$ be a normalized family of eigenstates of $T_N(f)$ with eigenvalue $\lambda_N = E + o(1)$. Let V be an open set at positive distance from $\{f = E\}$. Let $a \in C^\infty(M, \mathbb{R}^+)$ be such that $\mathrm{supp}(a) \cap \{f = E\} = \emptyset$ and $a = 1$ on V. The function a is of course not real-analytic; we will nevertheless prove that

$$T_N(a)u_N = O(e^{-cN}).$$

This implies Theorem 8.3, since

$$\int_V |u_N|^2 = \langle u_N, \mathbb{1}_V u_N\rangle \leq \langle u_N, a u_N\rangle = \langle u_N, T_N(a)u_N\rangle = O(e^{-cN}).$$

Let W be an open set of M such that

$$\mathrm{supp}(a) \subset\subset W \subset\subset \{f \neq E\}.$$

On W, the function $f - E$ is bounded away from zero. Let us consider, on a neighbourhood of $\mathrm{diag}(W)$ in $M \times M$, the analytic covariant symbol g which is such that $T_N^{cov}(g)$ is the analytic inverse (on this neighbourhood) of $T_N(f - \lambda(N))$. This symbol is well-defined: one can check that the construction of an inverse symbol in Proposition 8.5.1 only relies on local properties. The function $f - \lambda(N)$ might not be a classical analytic symbol, since we made no assumption on the eigenvalue $\lambda(N)$. However, for every t close to E one can define the microlocal inverse g_t of $f - t$ near W, in an analytic class independent of t, so that we define the microlocal inverse of $T_N(f - \lambda(N))$ as the operator with kernel

$$T_N^{cov}(g) : (x, y) \mapsto \Psi^N(x, y) g_{\lambda(N)}(N)(x, y).$$

We arbitrarily cut off g outside a neighbourhood of $\mathrm{diag}(W_1)$, where

$$W \subset\subset W_1 \subset\subset \{f \neq E\},$$

so that $T_N^{cov}(g)$ is a well-defined operator. Let us prove that, for some $c > 0$ small, one has

$$T_N(a)T_N^{cov}(g)T_N(f - \lambda_N) = T_N(a) + O(e^{-cN}).$$

By construction, uniformly on $x \in W_1$ and $z \in M$, one has

$$\int_{y\in M} T_N^{cov}(g)(x, y)T_N(f - \lambda_N)(y, z) = S_N(x, z) + O(e^{-cN}).$$

In particular, since $T_N(a)$ is bounded by $O(e^{-cN})$ on $W \times (M \setminus W_1)$, for $x \in W$ one has

$$\begin{aligned}
&\int_{y_1 \in M, y_2 \in M} T_N(a)(x, y_1) T_N^{cov}(g)(y_1, y_2) T_N(f - \lambda_N)(y_2, z) \\
&\quad = \int_{y_1 \in W_1, y_2 \in M} T_N(a)(x, y_1) T_N^{cov}(g)(y_1, y_2) T_N(f - \lambda_N)(y_2, z) + O(e^{-cN}) \\
&\qquad = \int_{y_1 \in W_1} T_N(a)(x, y_1) S_N(y_1, z) + O(e^{-cN}) \\
&\quad = \int_{y_1 \in M} T_N(a)(x, y_1) S_N(y_1, z) + O(e^{-cN}) = T_N(a)(x, z) + O(e^{-cN}).
\end{aligned}$$

Moreover, uniformly on $(x \notin W, y \in M)$ there holds $T_N(a)(x, y_1) = O(e^{-cN})$ so that, finally,

$$T_N(a) T_N^{cov}(g) T_N(f - \lambda_N) = T_N(a) + O(e^{-cN}).$$

In particular,

$$0 = T_N(a) T_N^{cov}(g) T_N(f - \lambda(N)) u_N = T_N(a) u_N + O(e^{-cN}),$$

which concludes the proof.

9

A WKB CONSTRUCTION FOR TOEPLITZ OPERATORS

We provide almost eigenfunctions for Toeplitz operators with real-analytic symbols, at the bottom of non-degenerate wells. These almost eigenfunctions follow the WKB ansatz; the error is $O(e^{-cN})$, where $c > 0$ and $N \to +\infty$ is the inverse semiclassical parameter.

Theorem 9.1. *Let M be a quantizable compact real-analytic Kähler manifold. Let f be a real-analytic function on M with $\min(f) = 0$.*

1. *Let $P_0 \in M$ be a non-degenerate minimal point of f. Then there exist*
   - *positive constants c, c', R,*
   - *a neighbourhood V of P_0,*
   - *a holomorphic function φ on V with $|\varphi(x)| \leq \frac{d(x,P_0)^2}{2}$,*
   - *a sequence of holomorphic functions $(u_k)_{k\geq 0}$, with*

$$\begin{aligned} u_0(P_0) &= 1 \\ u_k(P_0) &= 0 \qquad\qquad \text{for } k \neq 0, \end{aligned}$$

   - *a real sequence $(\lambda_k)_{k\geq 0}$, where λ_0 is the ground state energy of the Hessian of f at P_0 (see Chapter 4),*

   such that, if $\psi_{P_0}^N$ denotes the coherent state at P_0, then with

$$u(N) = \psi_{P_0}^N e^{N\varphi} \left(\sum_{k=0}^{cN} N^{-k} u_k \right),$$

   one has

$$\left\| T_N(f)u(N) - N^{-1} \left(\sum_{k=0}^{cN} N^{-k} \lambda_k \right) u(N) \right\|_{L^2(M, L^{\otimes N})} \leq Ce^{-c'N},$$

   and

$$\begin{aligned} |\lambda_k| &\leq CR^k k! \\ \sup_U |u_k| &\leq CR^k k!, \end{aligned}$$

2. *If the minimal set of f consists in a finite number of non-degenerate minimal points, then any eigenfunction of $T_N(f)$ with minimal eigenvalue is exponentially close to a linear combination of the functions constructed in item 1 at each minimal point.*

The pseudodifferential equivalent of this result is claimed in [MS99], with a quite elusive proof using the Sjöstrand analytic classes [Sjö82]. Several key arguments in [MS99] are stated without justification.

Pseudodifferential operators with real-analytic symbols can be written *exactly* as Toeplitz operators, with $M = \mathbb{C}^n$, so that Theorem 9.1 also contains (modulo some hypotheses on f at infinity) a complete proof for the result stated in [MS99]. This point of view on pseudodifferential operators is pertinent for WKB eigenmode construction and exponential estimates, both from the perspective of physics [Vor89] and from mathematics (all related proofs use the Fourier-Bros-Iagolnitzer transformation, which relates pseudodifferential operators to Toeplitz operators). In addition, the Toeplitz setting contains other semiclassical quantum operators such as spin systems, on which tunnelling estimates are widely studied in the physics community [OP15], although not always in a rigorous way.

Remark 9.0.1. If the minimal set of f consists in several non-degenerate wells, then applying the Part 1 of Theorem 9.1 at every well yields that the actual ground state, which is exponentially close to an orthogonal linear combination of almost eigenfunctions as above, has Agmon-type exponential decay in a neighbourhood of the minimal set, as in [HS84].

Even if the function φ can be defined and yields, formally, exponential decay far from the minimal point, this rate of decay is blurred, not only by the error terms in the expression of the Bergman kernel (Theorem 8.1) but also by the fact that we can only sum up to cN with c small when summing analytic symbols (see Proposition 7.2.6), which yields a fixed error of order $e^{-c'N}$ with $c' > 0$ small. This yields an upper bound on the decay rate, as a function of the position, which follows the blue, continuous line in the following picture:

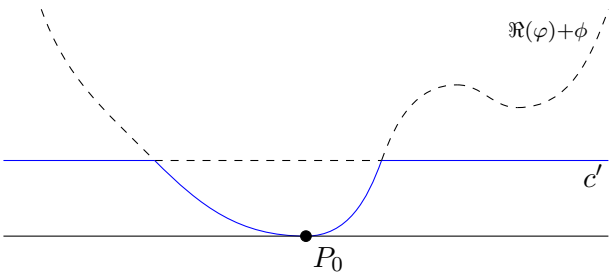

Near P_0, the rate of decay is sharp, but we have no explicit control on the constant c'.

Theorem 9.1 has applications to tunnelling in spin systems. In Proposition 9.3.1 we prove that, if f has two symmetrical wells, and λ_0, λ_1 denote the two first eigenvalues of $T_N(f)$ (with multiplicity), then

$$\lambda_1 - \lambda_0 \leq Ce^{-c'N},$$

where c' is as in Theorem 9.1.

In the physics community, the tunnelling rate $-N^{-1}\log(\lambda_1 - \lambda_0)$ is often estimated using the degree zero approximation φ in the WKB ansatz, which solves a Hamilton-Jacobi equation (see Proposition 9.1.3). However, in Proposition 9.3.2, we provide a series of examples which illustrate that the tunnelling rate is not given by φ, let alone by the best possible constant c' in Theorem 9.1.

The rest of this chapter is devoted to the proof of Theorem 9.1. Section 9.1 contains the geometrical ingredients required in order to build a *formal* WKB ansatz, that is, for every $K \in \mathbb{N}$, an approximate eigenstate of the form

$$x \mapsto \psi_{P_0}(x)e^{\varphi(x)}(a_0(x) + N^{-1}a_1(x) + \ldots + N^{-K}a_K(x)).$$

In Section 9.2, we identify the formal sequences $(a_k)_{k\geq 0}$ and $(\lambda_k)_{k\geq 0}$ corresponding to a candidate for the smallest eigenvalue and associated eigenvector, and prove that these sequences belong to an analytic class; this allows us to construct an approximate eigenstate of the form

$$x \mapsto \psi_{P_0}(x)e^{\varphi(x)} \sum_{k=0}^{cN} N^{-k}a_k(x),$$

which satisfies the eigenvalue equation for $T_N(f)$ up to $O(e^{-c'N})$, with $c > 0$ and $c' > 0$. A standard analysis of the distribution of low-lying eigenvalues of $T_N(f)$ allows us to conclude the proof in Section 9.3, where we also discuss the constant c' in the statement of Theorem 9.1.

The core of the proof of Theorem 9.1 consists in Propositions 9.1.4 and 9.2.2, where we prove that the sequences $(\lambda_k)_{k\geq 0}$ and $(u_k)_{k\geq 0}$ can be built by induction and satisfy the growth control

$$|\lambda_k| \leq CR^k k!$$
$$|u_k| \leq CR^k k!.$$

To this end, we use the framework developed in Chapter 7 and already used in Chapter 8.

9.1 Geometry of the WKB Ansatz

In this section we provide the geometric ingredients for the proof of Theorem 9.1. We formally proceed as in the case of a Schrödinger operator [Hel88]. If a real-analytic, real-valued function f has a non-degenerate minimum at $P_0 \in M$, we seek for a sequence of eigenfunctions of the form

$$\psi_{P_0}^N e^{N\varphi}(u_0 + N^{-1}u_1 + \ldots),$$

where $\psi_{P_0}^N$ denotes the coherent state at P_0. If the value of f at the bottom of the well is 0, then the associated sequence of eigenvalues should be of order $O(N^{-1})$, that is to say, follow the asymptotic expansion:

$$N^{-1}\lambda_0 + N^{-2}\lambda_1 + \ldots.$$

When solving the eigenvalue problem, the terms of order 0 in

$$e^{-N\varphi}T_N(f)\psi_{P_0}^N e^{N\varphi}(u_0 + N^{-1}u_1 + \ldots)$$

yield an equation on φ. In the case of a Schrödinger operator this is the eikonal equation $|\nabla\varphi|^2 = V$, which is solved using the Agmon metric. In our more general case, we are in presence of a form of the Hamilton-Jacobi equation (22) which we

solve in Proposition 9.1.3 using a geometric argument based on the existence of a stable manifold, in the spirit of [Sjö83]. Associated with f and φ are transport equations which we must solve in order to recover the sequence of functions $(a_k)_{k\geq 0}$. In Proposition 9.1.4 we study this transport equation under the point of view of symbol spaces of Definition 7.2.3. Then, in Proposition 9.2.2, we perform an analytic summation of the a_k's in order to find an exponentially accurate eigenfunction for $T_N(f)$, with exponential decay away from P_0.

The plan of this section is as follows: we begin in Subsection 9.1.1 with the study of an analytic phase which will be a deformation of the phase Φ_1 considered above. We then define and study the Hamilton-Jacobi equation associated with a real-analytic function near a non-degenerate minimal point, and the associated transport equations, in Subsections 9.1.2 and 9.1.3.

In the rest of this chapter,

- M is a quantizable real-analytic compact Kähler manifold;
- f is a real-valued function on M with real-analytic regularity with $\min(f) = 0$ and all minimal points of f are non-degenerate;
- $U \subset M$ is an open set on which f vanishes at exactly one point. U is identified with a neighbourhood of 0 in $\mathbb{C}^d$, with $f(0) = 0$ (in particular, $P_0 = 0$);
- ϕ is a Kähler potential on U such that
$$\phi(y) = \frac{|y|^2}{2} + O(|y|^3);$$
- $\widetilde{\phi}$ is the function on $U \times U$, holomorphic in the first variable, anti-holomorphic in the second variable, such that $\widetilde{\phi}(x, x) = \phi(x)$ (holomorphic extension or polarisation of ϕ);
- More generally, $\widetilde{\ }$ represents holomorphic extension of real-analytic functions: for instance, $\widetilde{f}$ is the extension of f and is defined on $U \times U$;
- Φ_1 is the phase associated with the composition of two Bergman kernels, that is,
$$\Phi_1 : (x, y, \overline{w}, \overline{z}) \mapsto 2\widetilde{\phi}(x, \overline{w}) - 2\widetilde{\phi}(y, \overline{w}) + 2\widetilde{\phi}(y, \overline{z}) - 2\widetilde{\phi}(x, \overline{z}).$$

Here, and in all this chapter, we write $\Phi_1(x, y, \overline{w}, \overline{z})$ to indicate that Φ_1 has anti-holomorphic dependence in its two last variables.

The section Ψ of Definition 8.1.1 satisfies the following cocycle condition:

$$\langle \Psi^{\otimes N}(x, y), \Psi^{\otimes N}(y, z)\rangle_{L_y^{\otimes N}} = \Psi^{\otimes N}(x, z) \exp(N\Phi_1(x, y, \overline{y}, \overline{z})).$$

Here, $\overline{y}$ is merely the complex conjugate of y.

9.1.0 Formal identification of the WKB ansatz

We search for an eigenfunction of $T_N(f)$ of the form

$$x \mapsto e^{N\varphi(x)}(u_0(x) + N^{-1}u_1(x) + \dots)\psi_0^N(x),$$

where ψ_0^N is the coherent state at 0 (see Definition 6.3.1), and $\phi, u_0, u_1, \dots$ are holomorphic functions on U.

This construction is local. Indeed, the holomorphic functions $\phi, u_0, u_1, \dots$ can only be extended to the whole of M if they are constant. However, if φ does not grow too fast (see Definition 9.1.1), then the trial function above is exponentially small outside any fixed neighbourhood of zero.

In particular, applying $T_N(f)$ yields

$$\begin{aligned} T_N(f)(e^{N\varphi}(u_0 + N^{-1}u_1 + \dots)\psi_0^N) : \\ x \mapsto \psi_0^N(x)e^{N\varphi(x)} \int_U e^{N\Phi_1(x,y,\overline{y},0)+N\varphi(y)-N\varphi(x)} f(y) \\ \times \left(\sum_{k=0}^{cN} N^{d-k}a_k(x,y)\right)\big(u_0(y) + N^{-1}u_1(y) + \dots\big)\mathrm{d}y \\ + O(e^{-cN}). \end{aligned}$$

If the function appearing in the exponential is a positive phase function (see Proposition 9.1.2), one can apply the stationary phase lemma. If $y_*(x)$ is the critical point of this phase (which belongs to $U \times U$), at dominant order, one has

$$T_N(f)(e^{N\varphi}u_0\psi_0^N)(x) = \psi_0^N(x)e^{N\varphi(x)}\widetilde{f}(y_*(x))a_0(x, y_*(x))u_0(y_*(x))J(x) + O(N^{-1}).$$

where J is a non-vanishing Jacobian.

Since we search for an eigenfunction with eigenvalue close to zero, we want this principal term to vanish. As J and a_0 do not vanish, this yields

$$\widetilde{f}(y_*(x)) = 0,$$

which boils down to a particular PDE on φ, the *Hamilton-Jacobi equation*. We provide a geometric solution to this equation in Proposition 9.1.3.

At next order, the eigenvalue equation reads, for all $x \in U$,

$$\begin{aligned} N^{-1}\lambda_0 u_0(x) + O(N^{-2}) &= T_N(f)(e^{N\varphi}(u_0 + N^{-1}u_1)\psi_0^N)(x) + O(N^{-2}) \\ &= N^{-1}\psi_0^N(x)e^{N\varphi(x)}\Big(\widetilde{f}J(a_0u_1 + a_1u_0)(y_*(x)) + \widetilde{\Delta}(x)(\widetilde{f}a_0u_0J)(y_*(x))\Big) \\ &\quad + O(N^{-2}). \end{aligned}$$

Here $\widetilde{\Delta}(x)$ is the Laplace operator conjugated with a change of variables (this change of variables acts on $(y, \overline{y})$ and is parametrized by x: it conjugates the initial phase with $v \mapsto -|v|^2$).

Since $\widetilde{f}(y_*(x)) = 0$, there is no contribution from u_1 at this order. Moreover, one can distribute

$$\widetilde{\Delta}(\widetilde{f}a_0u_0J) = \widetilde{f}a_0J\widetilde{\Delta}u_0 + u_0\widetilde{\Delta}(\widetilde{f}a_0J) + \widetilde{\nabla}(\widetilde{f}a_0J)\cdot\widetilde{\nabla}(u_0).$$

Then, the first term of the right-hand side is zero when evaluated at $y_*(x)$ since $\widetilde{f}(y_*(x)) = 0$. The second term, evaluated at zero will yield the associated eigenvalue at first order. Hence, it remains to solve

$$\Big(\widetilde{\nabla}(x)(\widetilde{f}a_0J)\Big)(y_*(x)) \cdot (\widetilde{\nabla}(x)u_0)(y_*(x)) = u_0(x)\Big(\lambda_0 - \widetilde{\Delta}(x)(\widetilde{f}a_0J)(y_*(x))\Big).$$

Observe that $\widetilde{f}$, as the complex extension of f, has a critical point at $x = 0$, so that, as long as $y_*(0) = 0$ (which is proved in Proposition 9.1.2), there holds $\widetilde{\nabla}(0)(\widetilde{f}a_0J)(y_*(0)) = 0$. Hence, the equation above implies

$$\lambda_0 = \widetilde{\Delta}(0)(\widetilde{f}a_0J)(0).$$

We will see in Proposition 9.2.1 that λ_0 indeed corresponds to the ground state energy of the Hessian of f at zero.

It remains to solve an equation of the form

$$\Big(\widetilde{\nabla}(x)(\widetilde{f}a_0J)\Big)(y_*(x)) \cdot (\widetilde{\nabla}(x)u_0)(y_*(x)) = u_0(x)h(x),$$

where h vanishes at zero. We solve this equation in Proposition 9.1.4.

Similar equations are satisfied by the successive terms u_k. This family of equations is solved (with a convenient control on the size of the solution) in Proposition 9.1.4. Then, in Section 9.2 we prove that the sequence u_k indeed forms an analytic symbol and that the eigenvalue equation admits a solution up to an $O(e^{-cN})$ error.

9.1.1 A family of phase functions

In this subsection we study a family of analytic phases (in the sense of Definition 7.3.1) given by a WKB ansatz at the bottom of a well. To begin with, we describe the conditions on a holomorphic function φ at a neighbourhood of zero, such that $e^{N\varphi}\psi_{P_0}^N$ is a convenient first-order candidate for the ground state of $T_N(f)$.

Definition 9.1.1. A holomorphic function φ on U is said to be *admissible* under the following conditions:

$$\begin{aligned} \varphi(0) &= 0 \\ d\varphi(0) &= 0 \\ \exists t < 1,\ \forall x \in U,\ |\varphi(x)| &< \frac{t}{2}|x|^2. \end{aligned}$$

Proposition 9.1.2. *Let φ be an admissible function. The function from $U \times U$ to $\mathbb{R}$ defined by:*

$$(x, y) \mapsto \Phi_1(x, y, \overline{y}, 0) + \varphi(y) - \varphi(x)$$

is, for all x in a small neighbourhood of zero, a positive phase function of y.

The complex critical point is $y_*(x) = (x, \overline{y}_c(x))$, where the holomorphic function $x \mapsto \overline{y}_c(x)$ satisfies

$$-2\partial_1\widetilde{\phi}(x, \overline{y}_c(x)) + 2\partial_1\widetilde{\phi}(x, 0) = -\partial\varphi(x).$$

In particular, $\overline{y}_c(0) = 0$.

Proof. Near $y = \overline{w} = 0$, there holds

$$\Phi_1(0, y, \overline{w}, 0) = -y \cdot \overline{w} + O(|y, \overline{w}|^3).$$

In particular, for $x = 0$, the function $(y, \overline{w}) \mapsto \Phi_1(0, y, \overline{w}, 0) + \varphi(y)$ has a critical point at $(0, 0)$ with non-degenerate, real negative Hessian (because $|\varphi(y)| \leq \frac{t|y|^2}{2}$). In particular, for x small enough, the function $(y, \overline{w}) \mapsto \Phi_1(x, y, \overline{w}, 0) + \varphi(y) - \varphi(x)$ has exactly one critical point near 0, with non-degenerate, negative real Hessian. The critical point $(y, \overline{w})$ satisfies the two equations

$$\begin{aligned} \overline{\partial}_{\overline{w}}\widetilde{\phi}(x, \overline{w}) - \overline{\partial}_{\overline{w}}\widetilde{\phi}(y, \overline{w}) &= 0 \\ -2\partial_y\widetilde{\phi}(y, \overline{w}) + 2\partial_y\widetilde{\phi}(y, 0) &= -\partial\varphi(y). \end{aligned}$$

The first equation yields $y = x$, then the second equation has only one solution $\overline{w} := \overline{y}_c(x)$, so that the phase at this critical point is equal to

$$2\widetilde{\phi}(x, \overline{y}_c(x)) - 2\widetilde{\phi}(x, \overline{y}_c(x)) + 2\widetilde{\phi}(x, 0) - 2\widetilde{\phi}(x, 0) + \varphi(x) - \varphi(x) = 0.$$

This concludes the proof. □

9.1.2 Hamilton-Jacobi equation

Let φ be an admissible function. For every $x \in M$ close to 0, there exists one $\overline{y_c}(x)$ in $\overline{U}$ such that $(x, \overline{y_c}(x))$ is a critical point for the phase of Proposition 9.1.2.

In order to find the phase of the WKB ansatz, we want to solve, in a neighbourhood of 0, the following system of equations on φ and $\overline{y_c}$, where φ is an admissible function:

$$\begin{cases} \widetilde{f}(x, \overline{y_c}(x)) = 0. \\ -2\partial_1\widetilde{\phi}(x, \overline{y}_c(x)) + 2\partial_1\widetilde{\phi}(x, 0) = -\partial\varphi(x). \end{cases} \tag{22}$$

This will be called the *Hamilton-Jacobi equation*. This equation is non-trivial already at the formal level: for fixed x the equation $\widetilde{f}(x, y) = 0$ defines (a priori) a manifold of complex codimension 1, which has a singularity at $x = 0$. On the other hand, we need to ensure that $\partial_1\widetilde{\phi}(x, \overline{y}_c(x))$ is a closed 1-form in order to solve for φ.

Proposition 9.1.3. *The Hamilton-Jacobi equation* (22) *admits a solution near* 0. *It is given by the stable manifold of the Hamiltonian flow of* $i\widetilde{f}$, *with respect to a particular symplectic form.*

Proof. Since the Taylor expansion of ϕ at zero is

$$\phi(x) = \frac{1}{2}|x|^2 + O(|x|^3),$$

the map

$$\overline{w} \mapsto 2\partial_1\widetilde{\phi}(x, \overline{w}) = \overline{w} + O(|x, \overline{w}|^2)$$

is a biholomorphism in a neighbourhood of zero, for x small. Let γ_x denote its inverse, then γ_x is tangent to identity at $x = \overline{w} = 0$.

Let

$$\widetilde{f}_1 : (x, z) \mapsto \widetilde{f}(x, \gamma_x(z)),$$

then the Hamilton-Jacobi equation (22) is equivalent to the modified system:

$$\begin{cases} \widetilde{f}_1(x, z_c(x)) = 0 \\ -z_c(x) + 2\partial_1 \widetilde{\phi}(x, 0) = -\partial\varphi(x). \end{cases}$$

Let Q be the Hessian of f at zero and $\widetilde{Q}$ its holomorphic extension. Then

$$\widetilde{f}_1(x, z) = \widetilde{Q}(x, z) + O(|x, z|^3)$$

since γ_x is tangent to identity at $x = \overline{w} = 0$.

In the modified system, there holds $z_c(x) = \partial(2\widetilde{\phi}(x, 0) + \varphi(x))$, so that finding $x \mapsto z_c(x)$ amounts to finding a holomorphic Lagrange submanifold $L = \{x, z_c(x)\}$ of $\mathbb{C}^d \times \mathbb{C}^d$ near 0, for the standard symplectic form $\Im(\sum \mathrm{d}x_j \wedge \mathrm{d}z_j)$ (which extends the symplectic form $\sum \mathrm{d}\Re(x_j) \wedge \mathrm{d}\Im(x_j)$), such that L is contained in $\{\widetilde{f}_1 = 0\}$ and is transverse to x. Then, near 0, one has $L = \{x, \partial F(x)\}$ for some holomorphic F, and it will only remain to check that $\varphi = F - 2\widetilde{\phi}(\cdot, 0)$ is admissible. As in [Sjö83], from f and the standard symplectic form, the Lagrangean L will be constructed as the stable manifold of the fixed point 0 for the symplectic flow of $i\widetilde{f}_1$.

Let us first focus on the special case where $\widetilde{f}_1$ is quadratic. Then $\widetilde{f}_1 = \widetilde{Q}$.

The quadratic form Q admits a symplectic diagonalisation with respect to the symplectic form $\sum \mathrm{d}\Re(x_j) \wedge \mathrm{d}\Im(x_j)$: there exists a symplectic matrix S, and positive numbers $\lambda_1, \ldots, \lambda_d$, such that

$$Q = S^T \operatorname{diag}(\lambda_1, \lambda_1, \lambda_2, \lambda_2, \ldots, \lambda_d, \lambda_d) S.$$

Then

$$\widetilde{Q} = \widetilde{S}^T \begin{pmatrix} 0 & \lambda_1 & & & & & \\ \lambda_1 & 0 & & & & 0 & \\ & & 0 & \lambda_2 & & & \\ & & \lambda_2 & 0 & & & \\ & & & & \ddots & & \\ & 0 & & & & 0 & \lambda_n \\ & & & & & \lambda_n & 0 \end{pmatrix} \widetilde{S}.$$

Let us study how the symplectic change of variables S behaves under complexification. From the KAK decompostion of the semisimple Lie group $Sp(2d)$, the matrix S can be written as $U_1 D U_2$, where U_1 and U_2 belong to $Sp(2d) \cap O(2d) \simeq U(d)$, and $D = \operatorname{diag}(\mu_1, \mu_1^{-1}, \ldots, \mu_d, \mu_d^{-1})$.

The complexified actions of U_1 and U_2 are straightforward: for $j = 1, 2$ one has $\widetilde{U}_j(x, z) = (U_j x, U_j^{-1} z)$. The action of D is diagonal: $D = \operatorname{diag}(D_1, \ldots, D_d)$, with

$$D_j(\Re(x_j), \Im(x_j)) = \mu_j \Re(x_j) + \mu_j^{-1} \Im(x_j).$$

Hence, the action of $\widetilde{D}$ is also block-diagonal, with

$$\widetilde{D}_j(x_j, z_j) = \left(\frac{\mu_j + \mu_j^{-1}}{2} x_j - \frac{\mu_j - \mu_j^{-1}}{2} z_j, \frac{\mu_j - \mu_j^{-1}}{2} x_j + \frac{\mu_j + \mu_j^{-1}}{2} z_j \right).$$

After applying successively the changes of variables $\widetilde{U}_1, \widetilde{D}, \widetilde{U}_2$, in the new variables, the quadratic form becomes

$$\widetilde{f}_1 \circ \widetilde{S} : (q,p) \mapsto \sum_{j=1}^{d} \lambda_j q_j p_j.$$

Among the zero set of this form, a space of particular interest is $\{p = 0\}$. It is a holomorphic Lagrangean subspace, which is preserved by the symplectic gradient flow of $\widetilde{f}_1$, and such that every solution starting from this subspace tends to zero for positive imaginary time. This subspace $\{p = 0\}$ is the *stable manifold of zero* for the symplectic gradient of $i\widetilde{f}_1$. Let us show that, in the starting coordinates (x, z), the stable manifold of $i\widetilde{f}_1$ has the requested properties for the solution of the Hamilton-Jacobi equation.

- The inverse change of variables $\widetilde{U}_2^{-1}$ leaves $\{p = 0\}$ invariant.
- The inverse change of variables $\widetilde{D}^{-1}$ sends $\{p = 0\}$ to $\{z = Ax\}$, with, for some $t < 1$ independent of x, $\|Ax\|_{\ell^2} \leq t\|x\|_{\ell^2}$. Indeed, the matrix A has diagonal entries $\frac{\mu_j - \mu_j^{-1}}{\mu_j + \mu_j^{-1}}$.
- The inverse change of variables $\widetilde{U}_1^{-1}$ sends $\{z = Ax\}$ to $\Lambda_0 = \{z = U_1 A U_1^{-1} x\}$, with a similar property: for some $t < 1$, there holds $\|U_1 A U_1^{-1} x\|_{\ell^2} \leq t\|x\|_{\ell^2}$.

Then Λ_0 is a linear space of the form $\{z = \partial F_0(x)\}$, where F_0 is the holomorphic function

$$F_0 : x \mapsto \frac{1}{2}\langle x, U_1 A U_1^{-1} x\rangle.$$

Then $\varphi : x \mapsto F_0(x) - 2\widetilde{\phi}(x, 0) = F_0(x) + O(|x|^3)$ is a solution to the Hamilton-Jacobi equations.

If $\widetilde{f}_1$ is quadratic, we just identified a holomorphic Lagrange submanifold transverse to $\{x = 0\}$ and contained in $\{\widetilde{f}_1 = 0\}$, as the stable manifold of 0 for the Hamiltonian flow of $i\widetilde{f}_1$. In the general case, $\widetilde{f}_1$ is a small perturbation of its quadratic part in a small neighbourhood of 0, so that, by the stable manifold Theorem ([Rue79], Theorem 6.1), the stable subspace Λ_0 is deformed into a stable manifold L which has the same properties: L is Lagrangean (since it is a stable manifold of a symplectic flow, it must be isotropic, and L has maximal dimension), and it is transverse to x a small neighbourhood of zero since $T_0 L$ is the linear Lagrangean subspace Λ_0 described above. Moreover, the Hamiltonian flow X of $i\widetilde{f}_1$ preserves $\widetilde{f}_1$ so that L is contained in $\{\widetilde{f}_1 = 0\}$.

Let us prove that L is a complex submanifold. By the Morse lemma, for every $x \in L$, one has

$$T_x L = \{\xi \in T_x \widetilde{M}, \lim_{t \to +\infty} \mathrm{d}X_t(\xi) = 0.\}$$

Since $i\widetilde{f}_1$ is holomorphic, the flow X_t is also holomorphic, so that

$$\xi \in T_x L \Rightarrow J\xi \in T_x L.$$

We finally let F be a holomorphic function such that $L = \{x, \partial F(x)\}$. With $\varphi : x \mapsto F(x) - 2\widetilde{\phi}(x, 0)$, and $z_c(x) = \partial F(x)$, we obtain a solution to the modified Hamilton-Jacobi equation

$$\begin{cases} \widetilde{f}_1(x, z_c) = 0 \\ -z_c + \partial_1 \widetilde{\phi}(x, 0) = -\partial\varphi(x). \end{cases}$$

Since $\widetilde{\phi}(x, 0) = O(|x|^3)$, one has $\varphi(x) = F(x) + O(|x|^3) = F_0(x) + O(|x|^3)$, so that $|\varphi(x)| = |F_0(x)| + O(|x|^3) < \frac{t}{2}|x|^2$ with $t < 1$ on a neighbourhood of 0. This concludes the proof. □

9.1.3 Transport equations

Given an admissible function φ which solves the Hamilton-Jacobi equation (22) associated with f, the function

$$(x, y) \mapsto \Phi_1(x, y, \overline{y}, 0) + \varphi(y) - \varphi(x)$$

is a positive phase function of y, with parameter x, by Proposition 9.1.2; one can apply the holomorphic Morse lemma to reduce this function, after a change of variables, to the holomorphic extension of the phase $(x, v) \mapsto -|v|^2$. The Laplace operator and the standard gradient, conjugated by the change of variables above and which appear in the stationary phase lemma (Proposition 7.3.3), are associated with a family of transport equations, which we solve now.

Proposition 9.1.4. *Let $f' : U \times \widetilde{U} \mapsto \mathbb{C}$ be holomorphic and such that*

$$f'(x, y, \overline{w}) = \widetilde{f}(y, \overline{w}) + O(|x, y, \overline{w}|^3),$$

and let φ be an admissible solution of the Hamilton-Jacobi equation (22). Let $x \in U$ and let $\widetilde{\nabla}(x)$ denote the modified gradient in the stationary phase lemma associated with the phase

$$(y, \overline{w}) \mapsto \Phi_1(x, y, \overline{w}, 0) + \varphi(y) - \varphi(x).$$

That is, if κ_x is a biholomorphism $(y, \overline{w}) \mapsto v(x, y, \overline{w})$ which conjugates the phase above with the holomorphic extension of $-|v|^2$, the operator $\widetilde{\nabla}(x)$ acts on functions defined on $U \times \widetilde{U}$ by

$$(\widetilde{\nabla}(x)a) : (x, y, \overline{w}) \mapsto \left(\frac{\partial a(x, \kappa_x^{-1}(v))}{\partial v_j}(x, \kappa_x(y, \overline{w})) \right)_{1 \le j \le 2d}.$$

Let also $\overline{y}_c$ be the holomorphic function of x such that $(x, \overline{y}_c(x))$ is the critical point of the phase above.

For every $g : U \to \mathbb{C}$ holomorphic with $g(0) = 0$, and every $h : U \to \mathbb{C}$ holomorphic with $h(0) = 0$, there exists a unique holomorphic function $u : U \to \mathbb{C}$ with $u(0) = 0$ which solves the following transport equation:

$$(\widetilde{\nabla}(x)f')(x, x, \overline{y}_c(x)) \cdot (\widetilde{\nabla}(x)[(x, y, \widetilde{w}) \mapsto u(y)])(x, x, \overline{y}_c(x)) = h(x)u(x) + g(x).$$

Moreover, up to a fixed linear change of variables, there exist $r_0(h, f', \varphi)$, $m_0(h, f', \varphi)$,$C(h, f', \varphi) > 0$ such that, for every

$$k \ge 0, \quad m \ge m_0(h, f', \varphi), \quad r \ge r_0(h, f', \varphi)(3/2)^{m - m_0(h, f', \varphi)}, \quad C_g > 0,$$

for every g as above which satisfies, for every $j \geq 0$,

$$\sum_{|\mu|=j} |\partial^\mu g(0)| \leq C_g \frac{r^j (j+k+1)!}{(1+j+k+1)^m}.$$

one has, for every $j \geq 0$,

$$\sum_{|\mu|=j} |\partial^\mu u(0)| \leq C(h, f', \varphi) C_g \frac{r^j (j+k)!}{(1+j+k)^m}.$$

Proof. We let X be the vector field on U such that

$$(\widetilde{\nabla}(x) f')(x, x, \overline{y}_c(x)) \cdot (\widetilde{\nabla}(x)[(x, y, \widetilde{w}) \mapsto u(y)])(x, x, \overline{y}_c(x)) = X \cdot u(x).$$

The proof consists in three steps. In the first step we prove that trajectories of X converge towards 0 in negative time, so that there is no dynamical obstruction to the existence of u (if X had wandering or closed trajectories, solving $X \cdot u = fu + g$ would require conditions on f and g). In the second step, we identify the successive terms of a formal power expansion of u, which allows us to control successive derivatives of u at 0. In the third step, we prove that the solution u is well-defined on U.

First step

We study the dynamics of the vector field X in a neighbourhood of zero. To this end, we relate κ to the linear change of variables which appeared in the proof of Proposition 9.1.3 in the case where f is quadratic.

We first note that, as the Taylor expansion of f' is

$$f' = \widetilde{f} + O((x, y, \overline{w})^3) = O((x, y, \overline{w})^2),$$

one has $X(0) = 0$. The Hessian of φ at zero is determined by the Hessian of f at zero; it then determines the linear part of κ at 0, hence the linear part of X at 0. Up to a linear unitary change of variables, there exists a diagonal matrix A, a unitary matrix U, and positive $\lambda_1, \ldots, \lambda_d$, such that

$$f : x \mapsto \sum_{j=1}^{d} \lambda_j |(UAx)_j|^2 + O(|x|^3).$$

Then $\varphi(x) = \frac{1}{2} x \cdot UAU^{-1} x + O(|x|^3)$, so that the phase reads

$$\Phi_1(x, y, \overline{w}, 0) + \varphi(y) - \varphi(x) = 2(x - y) \cdot \left(\overline{w} - \frac{1}{4} UAU^{-1}(x + y) \right) + O(|x, y, \overline{w}|^3).$$

In particular, at first order, one can write

$$\kappa_x(y, \overline{w}) = \left(y - x, \overline{w} - \frac{1}{4} U^{-1} AU(y + x) \right) + O(|(x, y, \overline{w})|^2).$$

Hence, the inverse change of variables is of the form

$$\kappa_x^{-1}(v, \overline{v}) = \left(v + x, \overline{v} + \frac{1}{4} U^{-1} AU(v + 2x) \right) + O(|(x, v, \overline{v})|^2),$$

so that

$$u \circ \kappa_x^{-1}(v, \overline{v}) = u(v + x + O|(x, v, \overline{v})|^2)$$

is holomorphic with respect to v, at first order.

We then wish to compute

$$\widetilde{\nabla}(x)f' \cdot \widetilde{\nabla}(x)u := \overline{\partial}_v(f' \circ \kappa_x^{-1}) \cdot \partial_v(u \circ \kappa_x^{-1}) + \partial_v(f' \circ \kappa_x^{-1}) \cdot \overline{\partial}_v(u \circ \kappa_x^{-1})$$

which is equal, at first order, to the opposite symplectic flow (for the symplectic form $\Im(\mathrm{d}v \wedge \mathrm{d}\overline{v})$) of if applied to u:

$$\widetilde{\nabla}(x)f' \cdot \widetilde{\nabla}(x)u := i\Big[\overline{\partial}_v(\widetilde{f} \circ \kappa_x^{-1}) \cdot \partial_v(u \circ \kappa_x^{-1}) - \partial_v(\widetilde{f} \circ \kappa_x^{-1}) \cdot \overline{\partial}_v(u \circ \kappa_x^{-1})\Big] + O(|x|^2).$$

As seen in the proof of Proposition 9.1.3, the critical manifold $\{v = \overline{v} = 0\}$ is the stable manifold for the Hamiltonian flow of $i\widetilde{f}$, so that each trajectory of the vector field above is repulsed from zero in a non-degenerate way; this concludes the first part of the proof.

Second step.

Since X has 0 as non-degenerate repulsive point, it can be diagonalised: there exists a linear change of variables on $\mathbb{C}^d$ after which

$$X = \sum_{i=1}^{d} \lambda_i x_i \partial_{x_i} + O(|x|^2),$$

for positive λ_i. From now on we apply this linear change of variables and we will control $\|\nabla^j u(0)\|_{\ell^1}$ in these coordinates. Let us expand

$$\begin{aligned} X \cdot u(x) &= \sum_{i=1}^{d} \left(\lambda_i x_i + \sum_{|\nu| \geq 2} \frac{a_{i,\nu}}{\nu!} x^\nu \right) \frac{\partial}{\partial x_i} u(x) \\ h(x) &= \sum_{|\nu| \geq 1} \frac{h_\nu}{\nu!} x^\nu \\ g(x) &= \sum_{|\nu| \geq 1} \frac{g_\nu}{\nu!} x^\nu. \end{aligned}$$

Then, for some $V \subset\subset U$ which contains 0, for some positive r_0, m_0, one has $a_i \in H(m_0, r_0, V)$ and $h \in H(m_0, r_0, V)$, so that, for all ν such that $|\nu| \geq 1$,

$$\begin{aligned} |h_\nu| &\leq C_h \frac{r_0^{|\nu|} \nu!}{(1 + |\nu|)^{m_0}} \\ |a_{i,\nu}| &\leq C_a \frac{r_0^{|\nu|-1} \nu!}{(|\nu|)^{m_0}} \qquad \text{if } |\nu| \geq 2. \end{aligned}$$

Let $m \geq m_0$ and $r \geq r_0 2^{m-m_0}$, to be fixed later on. Then, one has

$$\begin{aligned} |h_\nu| &\leq C_h \frac{r^{|\nu|} \nu!}{(1 + |\nu|)^{m}} \\ |a_{i,\nu}| &\leq C_a \frac{r^{|\nu|-1} \nu!}{(|\nu|)^{m}}. \end{aligned}$$

Let us suppose that, for some $k \geq 0$, for every $j \geq 0$, one has

$$\sum_{|\nu|=j} |g_\nu| \leq C_g \frac{r^j (j + k + 1)!}{(1 + k + j + 1)^m}.$$

We will solve the transport equation with

$$u : x \mapsto \sum_{|\nu|\geq 1} \frac{u_\nu}{\nu!} x^\nu,$$

and prove by induction on $j \geq 0$ that

$$\sum_{|\mu|=j} |u_\mu| \leq C(h, f', \phi) C_g \frac{r^j (j+k)!}{(1+k+j)^m},$$

as long as m is large enough with respect to C_a and C_h, and r is large enough accordingly.

For $j = 0$, one has $u(0) = 0$ by hypothesis. The transport equation is equivalent to the following family of equations indexed by μ with $|\mu| \geq 1$:

$$u_\mu \frac{\sum_{i=1}^d \lambda_i \mu_i}{\mu!} = \sum_{|\nu|\geq 1} \frac{h_\nu u_{\mu-\nu}}{\nu!(\mu-\nu)!} + \frac{g_\mu}{\mu!} - \sum_{i=1}^d \sum_{|\nu|\geq 2} \frac{a_{i,\nu} u_{\mu-\nu+\eta_i}}{\nu!(\mu-\nu+\eta_i)!}.$$

Here, as in the rest of the proof, η_i denotes the base polyindex with coefficients $(0, 0, \ldots, 0, 1, 0, \ldots, 0)$ where the 1 is at the site i.

Observe that u_μ appears only on the left-hand side of the equation above, while the right-hand side contains coefficients u_ρ with $\rho < \mu$. As the eigenvalues λ_i are all positive, one can solve for u_μ by induction. Indeed, there exists $C_\lambda > 0$ such that, for every $|\mu| \neq 0$ there holds

$$\sum_{i=1}^d \lambda_i \mu_i \geq C_\lambda^{-1} (|\mu| + 1).$$

In particular,

$$|u_\mu| \leq \frac{C_\lambda}{|\mu|+1} \left(|g_\mu| + \left| \sum_{|\nu|\geq 1} \frac{h_\nu u_{\mu-\nu} \mu!}{\nu!(\mu-\nu)!} \right| + \left| \sum_{i=1}^d \sum_{|\nu|\geq 2} \frac{a_{i,\nu} u_{\mu-\nu+\eta_i} \mu!}{\nu!(\mu-\nu+\eta_i)!} \right| \right).$$

One has

$$\begin{aligned} \sum_{|\mu|=j} \left| \sum_{|\nu|\geq 1} \frac{h_\nu u_{\mu-\nu} \mu!}{\nu!(\mu-\nu)!} \right| &= \sum_{\ell=1}^{j-1} \sum_{|\rho|=\ell} |u_\rho| \sum_{\substack{|\mu|=j \\ \mu\geq\rho}} \frac{|h_{\mu-\rho}|}{(\mu-\rho)!} \frac{\mu!}{\rho!} \\ &\leq C_h \sum_{\ell=1}^{j-1} r^{j-\ell} \sum_{|\rho|=\ell} |u_\rho| \sum_{\substack{|\mu|=j \\ \mu\geq\rho}} \frac{\mu!}{\rho!} \frac{1}{(1+j-\ell)^m}. \end{aligned}$$

For $|\rho| = \ell$ there holds

$$\sup_{\substack{|\mu|=j \\ \mu\geq\rho}} \frac{\mu!}{\rho!} \leq \frac{j!}{\ell!},$$

since if ρ_M denotes the largest index of ρ the supremum above is

$$(\rho_M + 1)(\rho_M + 2) \ldots (\rho_M + j - \ell).$$

Moreover, there are less than $(j-\ell+1)^d$ polyindices μ such that $|\mu|=j$ and $\mu\geq\rho$ with $|\rho|=\ell$. Hence,

$$\begin{aligned}\sum_{|\mu|=j}\left|\sum_{|\nu|\geq 1}\frac{h_\nu u_{\mu-\nu}\mu!}{\nu!(\mu-\nu)!}\right| &\leq C_h\sum_{\ell=1}^{j-1}r^{j-\ell}\frac{j!}{\ell!}\frac{(1+j-\ell)^d}{(1+j-\ell)^m}\sum_{|\rho|=\ell}|u_\rho|\\ &\leq C_hC(h,f',\varphi)C_g\frac{r^j}{(1+k+j)^m}\sum_{\ell=1}^{j-1}\frac{j!(\ell+k)!}{\ell!}\frac{(1+j-\ell)^d(1+k+j)^m}{(1+j-\ell)^m(1+k+\ell)^m}.\end{aligned}$$

First, $\frac{(\ell+k)!}{\ell!}=(\ell+k)(\ell+k-1)\dots(\ell+1)$ is increasing with respect to ℓ, so that

$$\frac{j!(\ell+k)!}{\ell!}\leq\frac{j!(k+j)!}{j!}=(k+j)!.$$

Second, from Lemma 7.2.7, if $m\geq\max(d+2,2d)$, there holds

$$\sum_{\ell=1}^{j-1}\frac{(1+j-\ell)^d(1+k+j)^m}{(1+j-\ell)^m(1+k+\ell)^m}\leq C(d)\frac{3^m}{4^m}.$$

In particular,

$$\sum_{|\mu|=j}\left|\sum_{|\nu|\geq 1}\frac{h_\nu u_{\mu-\nu}\mu!}{\nu!(\mu-\nu)!}\right|\leq C_hC(d)\frac{3^m}{4^m}C(h,f',\varphi)C_g\frac{r^j(j+k)!}{(1+k+j)^m}.$$

For m large enough with respect to $C_hC(d)C_\lambda$, and $r\geq r_0 2^{m-m_0}$, one has

$$\sum_{|\mu|=j}\left|\sum_{|\nu|\geq 1}\frac{h_\nu u_{\mu-\nu}\mu!}{\nu!(\mu-\nu)!}\right|\leq\frac{1}{3C_\lambda}C(h,f',\varphi)C_g\frac{r^j j!}{(1+k+j)^m}.$$

Similarly, one can control, for $1\leq i\leq d$, the quantity

$$\begin{aligned}\left|\sum_{|\nu|\geq 2}\frac{a_{i,\nu}u_{\mu-\nu+\eta_i}\mu!}{\nu!(\mu-\nu+\eta_i)!}\right| &= \sum_{\ell=1}^{j-1}\sum_{|\rho|=\ell}|u_\rho|\sum_{\substack{|\mu|=j\\ \mu\geq\rho-\eta_i}}\frac{|a_{i,\mu-\rho+\eta_i}|\mu!}{(\mu-\rho+\eta_i)!\rho!}\\ &\leq C_a\sum_{\ell=1}^{j-1}\sum_{|\rho|=\ell}|u_\rho|\sum_{\substack{|\mu|=j\\ \mu\geq\rho-\eta_i}}r^{j-\ell}\frac{\mu!}{\rho!}\frac{1}{(1+j-\ell)^m}\end{aligned}$$

Letting ρ_M denote again the large index of ρ, and ρ_m its smallest non-zero index, then

$$\max_{|\mu|\geq|\rho|-1}\frac{\mu!}{\rho!}=\frac{(\rho_M+j-\ell+1)!}{\rho_M!\rho_m}\leq\frac{(j+1)!}{\ell!}.$$

In particular, since

$$\sum_{|\rho|=\ell}|u_\rho|\leq C(h,f',\varphi)C_g\frac{r^\ell(k+\ell)!}{(k+\ell+1)^m},$$

one has, since $(k+\ell)!/\ell! = (k+\ell)(k+\ell-1)\dots(\ell+1) \leq (k+j+1)!/(j+1)!$, that

$$\begin{aligned}
&\left|\sum_{|\nu|\geq 2} \frac{a_{i,\nu} u_{\mu-\nu+\eta_i} \mu!}{\nu!(\mu-\nu+\eta_i)!}\right| \\
&\qquad \leq C_a C(h,f',\varphi) C_g r^j \sum_{\ell=1}^{j-1} \frac{(k+\ell)!(j+1)!}{\ell!} \frac{(1+j-\ell)^d}{(1+j-\ell)^m(1+k+\ell)^m} \\
&\qquad \leq C_a C(h,f',\varphi) C_g \frac{r^j(j+k+1)!}{(1+j+k)^m} \sum_{\ell=1}^{j-1} \frac{(1+j-\ell)^d(1+j+k)^m}{(1+j-\ell)^m(1+k+\ell)^m} \\
&\qquad \leq C_a C(d) \frac{3^m}{4^m} C(h,f',\varphi) C_g \frac{r^j(j+k+1)!}{(1+j+k)^m}.
\end{aligned}$$

Hence, for m and r large enough, one has, for every $1 \leq i \leq d$,

$$\left|\sum_{|\nu|\geq 2} \frac{a_{i,\nu} u_{\mu-\nu+\eta_i} \mu!}{\nu!(\mu-\nu+\eta_i)!}\right| \leq \frac{1}{3dC_\lambda} C(h,f',\varphi) C_g \frac{r^j(j+k+1)!}{(1+k+j)^m}.$$

To conclude, if $C(h,f',\varphi) \geq 3$, then

$$\sum_{|\mu|=j} |u_\mu| \leq \frac{1}{j+1}\left(\frac{1}{3}C(h,f',\varphi) + \frac{1}{3}C(h,f',\varphi) + \frac{1}{3}C(h,f',\varphi)\right) C_g \frac{r^j(j+k)!}{(1+k+j)^m},$$

which concludes the induction.

Third step

It only remains to prove that u is well-defined and holomorphic on U. Since the sequence of derivatives of u at 0 is well-controlled, the associated power series converges on some small neighbourhood V of 0. Then, from the knowledge of u on V one can build u on U using the geometric structure of the transport equation. Indeed, we recall that 0 is a repulsive fixed point for X. In particular, letting $(\Phi_t)_{t\in\mathbb{R}}$ denote the flow of $-X$, there exists $T > 0$ such that $\Phi_T(U) \subset V$. Then the transport equation on u is equivalent to

$$u(x) = u(\Phi_T(x)) + \int_0^T g(\Phi_t(x))\mathrm{d}t + \int_0^T u(\Phi_t(x))h(\Phi_t(x))\mathrm{d}t.$$

By the analytic Picard-Lindelöf theorem, the unique solution of this degree 1 differential equation, where the initial data $u(\Phi_T(x))$ and the coefficients have real-analytic dependence on $\Phi_T(x) \in V$, is well-defined and real-analytic. Then u is well-defined on U, and holomorphic since the derived equation on $\overline{\partial} u$ is $\overline{\partial} u = 0$. This concludes the proof.

□

9.2 Construction of almost eigenvectors

Solving the Hamilton-Jacobi equation then controlling successive transport equations allows us to prove the first part of Theorem 9.1, which is the object of this section.

The strategy of proof is the following: we first exhibit sequences $(u_i)_{i\geq 0}$ and $(\lambda_i)_{i\geq 0}$ such that the eigenvalue equation (24) is valid up to $O(N^{-\infty})$, and we control these sequences in analytic spaces. Then we prove that one can perform an analytic summation in (24).

Before proceeding, we note that, if φ is admissible and $u(N)$ is the summation of an analytic symbol, then $e^{N\varphi}u(N)\psi_0^N$ concentrates at 0, and moreover, by Proposition 7.2.6 and the stationary phase lemma, there exists $C>0$ such that, for every $N\in\mathbb{N}$, there holds

$$\frac{1}{C}N^{-n}\|e^{N\varphi}u(N)\psi_0^N\|_{L^2}\leq CN^{-n}.$$

In particular, if

$$\|(T_N(f)-\lambda_N)e^{N\varphi}u(N)\psi_0^N\|_{L^2}\leq Ce^{-c'N}$$

then λ_N will be exponentially close to the spectrum of $T_N(f)$. Thus, through Proposition 9.2.3 we are indeed providing almost eigenstates of $T_N(f)$ which concentrate on 0.

Proposition 9.2.1. *Let φ denote an admissible solution to the Hamilton-Jacobi equations (22), and let ψ_0^N denote the sequence of coherent states at 0. There exists $V\subset\subset U$ containing zero, a sequence $(u_k)_{k\geq 0}$ of holomorphic functions on U, and a sequence $(\lambda_k)_{k\geq 0}$ of real numbers, such that for every $K\geq 0$ there holds*

$$\left\|\left(T_N(f)-\sum_{k=0}^{K}N^{-k}\lambda_k\right)\psi_0^N e^{N\varphi}\sum_{k=0}^{N}N^{-k}u_k\right\|_{L^2(V)}=O(N^{-n-K-1}).$$

One has

$$\lambda_0=\min\operatorname{Sp}(T_1(\operatorname{Hess}(f)(0))).$$

Proof. By Theorem 8.1, if a denotes the symbol of the Bergman kernel, then there exists $c'>0$ such that, for all $x\in U$,

$$\begin{aligned}&T_N(f)\big(\psi_0^N e^{N\varphi}u(N)\big)(x)=\\&\psi_0^N(x)e^{N\varphi(x)}\int_{y\in M}e^{N(\Phi_1(x,y,\overline{y},0)+\varphi(y)-\varphi(x))}\frac{a(N)(x,\overline{y})}{a(N)(x,0)}a(N)(y,0)f(y,\overline{y})u(N)(y)\mathrm{d}y\\&\qquad\qquad+O(e^{-c'N}).\end{aligned}$$

We are able to apply the stationary phase Lemma. Let $*$ denote the Cauchy product of symbols, and let b be the analytic symbol such that

$$b(x,y,\overline{w})=f(y,\overline{w})a(x,\overline{w})*a^{*-1}(x,0)*a(y,0)J(x,y,\overline{w}),$$

where J is the Jacobian of the change of variables κ_x mapping

$$(y,\overline{w})\mapsto\Phi_1(x,y,\overline{w},0)+\varphi(y)-\varphi(x)$$

to the holomorphic extension of $v \mapsto -|v|^2$. Let also $\widetilde{\Delta}(x) = \kappa_x^{-1} \circ \Delta \circ \kappa_x$ (where κ_x acts on functions by a change of variables). Then

$$\begin{aligned} &e^{-N\varphi(x)} T_N(f)\big(\psi_0^N e^{N\varphi} u\big)(x) \\ &\quad = \psi_0^N(x) \sum_{k=0}^{+\infty} N^{-k} \sum_{n=0}^{k} \frac{\widetilde{\Delta}^n(x)}{n!} (u(y) b_{k-n}(x,y,\overline{w}))\Big|_{(y,\overline{w})=(x,\overline{y_c}(x))} + O(N^{-\infty}). \end{aligned} \tag{23}$$

The modified Laplace operator $\widetilde{\Delta}(x)$ depends on x and acts on $y, \overline{w}$. Using Proposition 9.1.4 with

$$f' : (x, y, \overline{w}) \mapsto b_0(x, y, \overline{w}),$$

which indeed coincides with f up to $O(|x, y, \overline{w}|^3)$, we will construct by induction a sequence of holomorphic functions u_i and a sequence of real numbers λ_i such that

$$\begin{aligned} &T_N(f)\left(\psi_0^N e^{N\varphi} \sum_{k=0}^{+\infty} N^{-k} u_k\right)(x) \\ &\qquad = \psi_0^N(x) e^{N\varphi(x)} \left(\sum_{j=0}^{+\infty} N^{-j-1} \lambda_j\right) \left(\sum_{k=0}^{cN} N^{-k} u_k(x)\right) + O(N^{-\infty}). \end{aligned} \tag{24}$$

We further require that

$$u_k(0) = \begin{cases} 1 & \text{if } k = 0 \\ 0 & \text{else.} \end{cases}$$

In the right-hand side of (24), there are no terms of order 0. In the left-hand side, the term of degree 0 is given by the term $k = 0$ in (23), so that one needs to solve

$$f(x, \overline{y}_c(x)) u_0(x) \frac{a_0(x,0)}{a_0(y,0)} a_0(x, \overline{y}) J(x, x, \overline{y}_c(x)) = b_0(x, x, \overline{y}_c(x)) u_0(x) = 0.$$

Since $f(x, \overline{y}_c(x)) = 0$, this equation is always satisfied.

By the stationary phase lemma (23), the order 1 in (24) reads

$$\lambda_0 u_0(x) - (\widetilde{\Delta}(x) b_0)(x, x, \overline{y}_c(x)) u_0(x) - (\widetilde{\nabla}(x) b_0)(x, x, \overline{y}_c(x)) \cdot \widetilde{\nabla}(x) u_0(x) = 0. \tag{25}$$

The equation (25) allows us to solve for u_0 with the supplementary condition $u_0(0) = 1$. Indeed, as $\widetilde{\nabla}(x) b_0(0) = 0$, at $x = 0$, the order 1 reads

$$\lambda_0 - (\widetilde{\Delta}(x) b_0)(0, 0, 0) = 0,$$

so that we set

$$\lambda_0 = (\widetilde{\Delta}(x) b_0)(0, 0, 0).$$

We now prove that λ_0 coincides with the ground state energy of the associated quadratic operator $T_N(\mathrm{Hess}(f)(0))$. Indeed, λ_0 depends only on the Hessian of f and ϕ at zero (which together determine the Hessian of φ at zero as seen in Proposition 9.1.3, thus they determine the linear part of the change of variables κ in the stationary phase lemma, which in turn determines $\widetilde{\Delta}$ and J at 0). If f and ϕ are quadratic, then the solution φ of the Hamilton-Jacobi equation is also quadratic as constructed in Proposition 9.1.3, so that $u_0 = 1$ satisfies (24) exactly. Thus, λ_0 is an

eigenvalue of $T_N(\mathrm{Hess}(f)(0))$ which depends continuously on $\mathrm{Hess}(f)(0)$. Moreover, if $\mathrm{Hess}(f)(0) : y \mapsto |y|^2$, then $\mathrm{Hess}(\varphi) = 0$ so that the eigenvector of $T_N(\mathrm{Hess}(f)(0))$ associated with λ_0 is the coherent state (in $\mathbb{C}^d$) ψ_0^N, which is the ground state of $T_N(|y|^2)$; thus in this case λ_0 is the ground state energy. Since the set of positive definite quadratic forms in $\mathbb{R}^{2d}$ is connected, and since there is always a gap between the ground state energy and the first excitation, then λ_0 is always the ground state energy of $T_N(\mathrm{Hess}(f)(0))$.

We wish now to find u_0 such that $u_0(0) = 1$. Setting $v_0 = u_0 - 1$ yields

$$\widetilde{\nabla}(x)v_0(x) \cdot (\widetilde{\nabla}(x)b_0)(x, x, \overline{y}_c(x)) = v_0(x)\Big[(\widetilde{\Delta}(x)b_0)(x, x, \overline{y}_c(x)) - (\widetilde{\Delta}(x)b_0)(0, 0, 0)\Big].$$

We then solve for v_0 using Proposition 9.1.4 with $f' = b_0$, which indeed yields $v_0(0) = 0$.

Let us now find the remaining terms of the sequences $(u_k)_{k\geq 0}$ and $(\lambda_k)_{k\geq 0}$ by induction. For $k \geq 1$, the term of order $k+1$ in (24) is given again by the stationary phase lemma (23): at this order, the equation is

$$\begin{aligned}&\lambda_k u_0(x) + \lambda_0 u_k(x) - (\widetilde{\Delta}(x)b_0)(x, x, \overline{y}_c(x))u_k(x) - (\widetilde{\nabla}(x)b_0)(x, x, \overline{y}_c(x)) \cdot \widetilde{\nabla}(x)u_k(x)\\ &= -\sum_{j=1}^{k-1} \lambda_j u_{k-j}(x) + \sum_{n=2}^{k+1} \sum_{l=0}^{k+1-n} \frac{\widetilde{\Delta}^n(x)}{n!}(u_l(y)b_{k+1-n-l}(x, y, \overline{w}))\Big|_{(y,\overline{w})=(x,\overline{y_c}(x))}. \qquad (26)\end{aligned}$$

In this equation, we have put to the left-hand side all terms involving λ_k or u_k, and all terms involving λ_l and u_l with $l < k$ to the right-hand side. We can apply Proposition 9.1.4 to solve for u_k, λ_k once $(u_l, \lambda_l)_{0\leq l\leq k-1}$ are known.

Observe that (26), at order $k + 1$, takes the form

$$(\widetilde{\nabla}(x)b_0)(x, x, \overline{y}_c(x)) \cdot \widetilde{\nabla}u_k(x) = g_k(x) + h(x)u_k(x),$$

with $h(x) = \widetilde{\Delta}(x)b_0(x, x, \overline{y}_c(x)) - \lambda_0$ and

$$\begin{aligned}g_k(x) = &-\sum_{l=1}^{k-1} \lambda_l u_{k-l}(x) - \lambda_k u_0\\ &+ \sum_{n=2}^{k+1} \sum_{l=0}^{k+1-n} \frac{\widetilde{\Delta}^n(x)}{n!}(u_l(y)b_{k+1-n-l}(x, y, \overline{w}))\Big|_{(y,\overline{w})=(x,\overline{y}_c(x))}.\end{aligned}$$

By construction of λ_0, one has $h(0) = 0$; moreover,

$$g_k(0) = \sum_{n=2}^{k+1} \sum_{l=0}^{k+1-n} \frac{\widetilde{\Delta}^n(0)}{n!}(u_l(y)b_{k+1-n-l}(0, y, \overline{w}))\Big|_{(y,\overline{w})=(0,0)} - \lambda_k.$$

Thus, one can solve for λ_k by setting $g_k(0) = 0$, then solve for u_k using Proposition 9.1.4 (indeed, g_k is a holomorphic function, so that it belongs to some analytic space $H(m, r, V)$). This concludes the proof. □

Proposition 9.2.2. *Let $(u_k)_{k\geq 0}$ and $(\lambda_k)_{k\geq 0}$ be the sequences constructed in the previous proposition, corresponding to an $O(N^{-\infty})$ eigenfunction of $T_N(f)$. Then*

there exist $C > 0$, $R > 0$, $r > 0$, $m \in \mathbb{R}$ *and an open set* $V \subset\subset U$ *containing* 0 *such that, for all* $k \geq 0, j \geq 0$, *one has*

$$\|u_k\|_{C^j(X)} \leq C \frac{r^j R^k (j+k)!}{(j+k+1)^m}$$
$$|\lambda_k| \leq C \frac{R^k (k+1)!}{(k+2)^m}.$$

Before the proof, let us recall that we fixed the following convention for the C^j norm in Definition 7.2.3 (in the case of an open set of $\mathbb{C}^d$):

$$\|f\|_{C^j(V)} = \sup_{x \in V} \sum_{|\mu|=j} |\partial^\mu f(x)|.$$

In particular, this corresponds to the control in Proposition 9.1.4 (which we performed only at zero).

Proof. Let us prove that λ_k and u_k are controlled in an analytic way as k grows. The proof consists in three steps. In the first step, we show that in equation (26) (that is, in the definition of g_k), no derivatives of u_l of order larger than n appear. The second step is an induction: we suppose some control on all derivatives of u_l at zero, for $0 \leq l \leq k-1$, and we apply Lemma 8.4.2 to deduce that the derivatives of g_k at zero are well-behaved. We then apply Proposition 9.1.4 to obtain a control on the derivatives of u_k at zero. In the last step, we deduce, from a control of the derivatives of u_k at zero, a control of the same nature on a small open neighbourhood.

First step.

Let g be a holomorphic function near 0 in M. Then $T_N(g)$ is, locally, a multiplication operator, so that

$$e^{-N\varphi} T_N(g)(\psi_0^N e^{N\varphi} u) = \psi_0^N g u + O(e^{-c'N}).$$

In this particular case, no derivative of u of order ≥ 1 appear in (23), hence in (26).

We then decompose any real-analytic function g as

$$g(y, \overline{y}) = g(y, \overline{y}_c(x)) + (g(y, \overline{y}) - g(y, \overline{y}_c(x))).$$

In the right-hand side, the second term vanishes when $\overline{y} = \overline{y}_c(x)$, so that, with

$$\Phi : (x, y, \overline{w}) \mapsto \Phi_1(x, y, 0) + \varphi(y) - \varphi(x),$$

there exists a smooth vector-valued function g_1 such that

$$g(y, \overline{y}) = g(y, \overline{y}_c(x)) + \partial_y \Phi(x, y, \overline{y}) \cdot g_1(x, y, \overline{y}).$$

Now S_N acts as the identity on holomorphic functions and $\overline{y}_c$ is a holomorphic function of x so that, by integration by parts:

$$\begin{aligned}
&\int e^{-N\Phi(x,y,\overline{y})} a(N)(x, \overline{y}) g(y, \overline{y}) u(y) \mathrm{d}y \\
&= g(x, \overline{y}_c(x)) u(x) + \int e^{-N\Phi(x,y,\overline{y})} a(N)(x, \overline{y}) \partial_y \Phi(x, y, \overline{y}) \cdot g_1(x, y, \overline{y})\, u(y) \mathrm{d}y + O(e^{-c'N}) \\
&= g(x, \overline{y}_c(x)) u(x) + N^{-1} \int e^{-N\Phi(x,y,\overline{y})} a(N)(x, \overline{y}) \partial_y [g_1(x, y, \overline{y}) u(y)] \mathrm{d}y + O(e^{-c'N}).
\end{aligned}$$

By induction, the terms of order N^{-k} in the expansion (23) only contain derivatives of u of order smaller than k.

Second step.

Let us prove by induction that the sequences $(u_k)_{k\geq 0}$ and $(\lambda_k)_{k\geq 0}$ are analytic symbols. We will make use of the precise controls obtained in Proposition 9.1.4. Since $(b_k)_{k\geq 0}$ is an analytic symbol and u_0 is holomorphic, by Proposition 7.2.8 there exists a small open neighbourhood V of zero and $r_0, R_0, m_0, C_b, C_0 > 0$ such that, after the Morse change of variables,

$$\|b_k\|_{C^j(V)} \leq C_b \frac{r_0^j R_0^k (j+k)!}{(j+k+1)^{m_0}}$$
$$\|u_0\|_{C^j(V)} \leq C_0 \frac{r_0^j j!}{(j+1)^{m_0}}.$$

In particular, for any $m \geq m_0$, for any $r \geq 2^{m+1-m_0} r_0$ and $R \geq 2^{m+1-m_0} R_0$, one has, after the Morse change of variables,

$$\|b_k Jf\|_{C^j(V)} \leq C_b \frac{(r/3)^j (R/3)^k (j+k)!}{(j+k+1)^m}$$
$$\|u_0\|_{C^j(V)} \leq C_0 \frac{r^j j!}{(j+1)^m}.$$

In equation (26), let us isolate the terms involving u_0. There holds

$$\begin{aligned}\lambda_k u_0(x) + \lambda_0 u_k(x) - \widetilde{\Delta}(x) b_0(x,x,\overline{y}) u_k(x) - \widetilde{\nabla}(x) b_0(x,x,\overline{y}_c(x)) \cdot \widetilde{\nabla}(x) u_k(x) \\ = \sum_{n=2}^{k+1} \frac{\widetilde{\Delta}^n(x)}{n!} (u_0(y) b_{k+1-n}(x,y,\overline{y}))(x,\overline{y}_c(x)) \\ - \sum_{j=1}^{k-1} \lambda_j u_{k-j}(x) + \sum_{n=2}^{k+1} \sum_{l=1}^{k+1-n} \frac{\widetilde{\Delta}^n(x)}{n!} (u_l(y) b_{k+1-n-l}(x,y,\overline{y}))(x,\overline{y}_c(x)).\end{aligned}$$

Let m, r, R, C_u, C_λ be large enough (they will be fixed in the course of the induction), and suppose that, for all $0 \leq l \leq k-1$ and all $j \geq 0$, one has

$$|\lambda_l| \leq C_\lambda \frac{R^l (l+1)!}{(l+2)^m}$$
$$\|\nabla^j u_l(0)\|_{\ell^1} \leq C_u \frac{r^j R^l (j+l)!}{(j+l+1)^m}.$$

To begin with, we estimate how the iterated modified Laplace operator $\widetilde{\Delta}^n(x)$ acts on u_ℓ using the fact that it differentiates it at most n times.

After a change of variables $\kappa_x : (y, \overline{w}) \mapsto v(x, y, \overline{y})$ for which the phase is the holomorphic extension of the standard quadratic form $-|v|^2$, one has simply

$$\widetilde{\Delta}(x) = \Delta_v = \sum_{i=1}^{2d} \frac{\partial^2}{\partial v_i^2}.$$

Hence,

$$\Delta_v^n[u_l(y(v))b_{k+1-n-l}(x,y(v),\overline{y}(v))]_{v=0} =$$
$$\sum_{|\mu|=n}\sum_{\nu\le 2\mu}\frac{n!(2\mu)!}{\mu!\nu!(2\mu-\nu)!}\partial_v^\nu u_l(x,y(x,v))_{v=0}\partial_v^{2\mu-\nu}b_{k+1-n-l}(x,y(x,v),\overline{y}(x,v))_{v=0}.$$

Since Δ_v^n differentiates at most n times on u_l, in the expression above, the differential operator

$$\partial_v^\nu u_l(x,y(x,v))_{v=0}$$

can be replaced with its truncation into a differential operator of degree less or equal to n, which we denote by $(\partial_\kappa^\nu)^{[\le n]}u_l(x)$ as in Lemma 8.4.2 and Proposition 8.4.3. In particular, for every $\rho\in\mathbb{N}^d$,

$$\begin{aligned}\partial_x^\rho\Delta_v^n[u_l(y(v))b_{k+1-n-l}(x,y(v),\overline{y}(v))]_{v=0}&\\ =\sum_{|\mu|=n}\sum_{\nu\le 2\mu}\sum_{\rho_1\le\rho}&\frac{n!(2\mu)!\rho!}{\mu!\nu!(2\mu-\nu)!\rho_1!(\rho-\rho_1)!}\\ \times\partial_x^{\rho_1}(\partial_\kappa^\nu)^{[\le n]}u_l(x)&\partial_x^{\rho-\rho_1}\partial_v^{2\mu-\nu}b_{k+1-n-l}(x,y(x,v),\overline{y}(x,v))_{v=0}.\end{aligned}$$

Moreover, if $|\mu|=n$ then

$$\frac{n!}{\mu!}\le(2d)^n,$$

and if $\nu\le 2\mu$ then, by Lemma 7.4.3,

$$\frac{(2\mu)!\rho!}{\nu!(2\mu-\nu)!\rho_1!(\rho-\rho_1)!}=\binom{2\mu}{\nu}\binom{\rho}{\rho_1}\le\binom{2n}{|\nu|}\binom{|\rho|}{|\rho_1|}.$$

Hence,

$$\|\nabla_x^j\Delta_v^n[u_l(y(v))b_{k+1-n-l}(x,y(v),\overline{y}(v))]_{v=x=0}\|_{\ell^1}\le$$
$$(2d)^n\sum_{i_1=0}^{2n}\sum_{j_1=0}^{j}\binom{2n}{i_1}\binom{j}{j_1}\|\nabla_x^{j_1}(\nabla_\kappa^{i_1})^{[\le n]}u_l\|_{\ell^1}\|b_{k+1-n-l}(x,y(v),\overline{y}(v))\|_{C^{j-j_1+2n-i_1}(V)}.$$

By the induction hypothesis, one has

$$\|\nabla_v^j u_l(0)\|_{\ell^1}\le C_u\frac{r^jR^k(j+l)!}{(j+l+1)^m},$$

then, by Lemma 8.4.2,

$$\begin{aligned}\|\nabla_x^{j_1}(\nabla_\kappa^{i_1})^{[\le n]}u_l(y(v))_{x=v=0}\|_{\ell^1}&\\ \le i_1^{d+1}j_1^{d+1}C_u\frac{r^{j_1+i_1}R^l}{(i_1+j_1+l+1)^m}&(C''r_0)^{i_1}A(i_1,j_1,l,n),\end{aligned}\tag{27}$$

where

$$A(i,j,l,n)=\begin{cases}\max((n+j+l)!(i-n)!\ ,\ (j+l)!i!) & \text{if } i\ge n\\ (i+j+l)! & \text{otherwise.}\end{cases}$$

In the case $l = 0$, the constant C_u can be replaced with the smaller constant C_0.

The control (27) allows us to conclude the induction. We first solve for λ_k using equation (26) at $x = 0$:

$$\lambda_k = \sum_{n=2}^{k+1} \sum_{l=0}^{k+1-n} \frac{\widetilde{\Delta}^n}{n!}(u_l(y) b_{k+1-n-l}(x, y, \overline{y}))(0, 0).$$

Then, by the induction hypothesis and (27),

$$\begin{aligned}|\lambda_k| \leq C_u C_b \sum_{n=2}^{k+1} \frac{R^k (k+1)!}{(k+2)^m} (2d)^n R \left(\frac{C'' r^2}{R}\right)^n \times \\ \sum_{i_1=0}^{2n} \sum_{l=0}^{k+1-n} \frac{(2n)! A(i_1, 0, l, n)(k+1-n-l+2n-i_1)!}{3^{k+1-n-l+2n-i_1} i_1! (2n-i_1)! n! (k+1)!} \\ \times \frac{(k+2)^m}{(i_1+l+1)^m (k+2+n-l-i_1)^m}.\end{aligned}$$

Let us prove that

$$\frac{(2n)! A(i_1, 0, l, n)(k+1-n-l+2n-i_1)!}{3^{k+1-n-l+2n-i_1} i_1! (2n-i_1)! n! (k+1)!} \leq 2^n.$$

If $i_1 \leq n$, since

$$(k+1-n-l+2n-i_1)! \leq (2n-i_1)!(k+1-n-l)! 2^{k+1-n-l-2n-i_1},$$

one has

$$\frac{(2n)!(i_1+l)!(k+1-n-l+2n-i_1)!}{3^{k+1-n-l+2n-i_1} i_1! (2n-i_1)! n! (k+1)!} \leq \frac{(2n)!(i_1+l)!(k+1-n-l)!}{n! i_1! (k+1)!}.$$

The right-hand side is increasing with respect to i_1 as it can be written

$$C(i_1+l)(i_1+l-1)\dots(i_1+1),$$

so that

$$\begin{aligned}\frac{(2n)!(i_1+l)!(k+1-n-l+2n-i_1)!}{3^{k+1-n-l+2n-i_1} i_1! (2n-i_1)! n! (k+1)!} &\leq \frac{(2n)!}{n!n!} \frac{(n+l)!(k+1-n-l)!}{(k+1)!} \\ &\leq 2^n \binom{k+1}{n+l}^{-1} \\ &\leq 2^n.\end{aligned}$$

If $i_1 \geq n$, in one case, since

$$\frac{(k+1-n-l+2n-i_1)!}{(2n-i_1)!} \leq \frac{(k+1-l)!}{n!},$$

one has

$$\frac{(2n)! i_1! l! (k+1-n-l+2n-i_1)!}{3^{k+1-n-l+2n-i_1} i_1! (2n-i_1)! n! (k+1)!} \leq \frac{(2n)! l! (k+1-l)!}{n! n! (k+1)!} \leq 2^n \binom{k+1}{l}^{-1} \leq 2^n.$$

In the other case,

$$\frac{(2n)!(n+l)!(i_1-n)!(k+1-n-l+2n-i_1)!}{3^{k+1-n-l+2n-i_1}i_1!(2n-i_1)!n!(k+1)!} \leq \frac{(2n)!(n+l)!(i_1-n)!(k+1-n-l)!}{i_1!n!(k+1)!}.$$

The right-hand term is maximal at $i_1 = n$, so that

$$\frac{(2n)!(n+l)!(i_1-n)!(k+1-n-l+2n-i_1)!}{3^{k+1-n-l+2n-i_1}i_1!(2n-i_1)!n!(k+1)!} \leq \frac{(2n)!(n+l)!(k+1-n-l)!}{n!n!(k+1)!} \leq 2^n.$$

In particular,

$$|\lambda_k| \leq C_u C_b \sum_{n=2}^{k+1} \frac{R^k(k+1)!}{(k+2)^m}(2d)^n R\left(\frac{2C''r^2}{R}\right)^n \times \sum_{i_1=0}^{2n}\sum_{l=0}^{k+1-n} \frac{(k+2)^m}{(i_1+l+1)^m(k+2+n-l-i_1)^m},$$

Since $(k+2)^m \leq (k+2+n)^m$, one has

$$|\lambda_k| \leq C_u C_b \sum_{n=2}^{k+1} \frac{R^k(k+1)!}{(k+2)^m}(2d)^n R\left(\frac{2C''r^2}{R}\right)^n \times \sum_{i_1=0}^{2n}\sum_{l=0}^{k+1-n} \frac{(k+n+2)^m}{(i_1+l+1)^m(k+2+n-l-i_1)^m},$$

Then, by Lemma 7.1.12, there holds

$$|\lambda_k| \leq C_u C_b \frac{R^k(k+1)!}{(k+2)^m} R \sum_{n=2}^{k+1}\left(\frac{\kappa r^2}{R}\right)^n.$$

For R large enough (once r, m, C_u, C_λ are fixed), this is smaller than $C_\lambda \dfrac{R^k(k+1)!}{(k+2)^m}$.

We now pass to the control on u_k. We recall that u_k solves an equation of the form

$$X \cdot u_k = hu_k + g_k,$$

with X and h independent on k and

$$g_k : x \mapsto -\sum_{l=1}^{k-1} \lambda_l u_{k-l}(x) - \lambda_k u_0(x) + \sum_{n=2}^{k+1}\sum_{l=0}^{k+1-n} \frac{\widetilde{\Delta}^n(x)}{n!}(u_l(y) b_{k+1-n-l}(x,y,\overline{y}))\Big|_{(y,\overline{y})=(x,\overline{y}_c(x))}.$$

Let us control the derivatives of g_k at zero, in order to apply Proposition 9.1.4. One has first

$$\|\lambda_k \nabla^j u_0(0)\|_{\ell^1} \leq C_\lambda C_0 \frac{r^j R^k (j+k+1)!}{(j+k+2)^m}.$$

Once C_λ is fixed, this is smaller than ϵC_u for C_u large enough.

Moreover,

$$\begin{aligned}\Big\|\sum_{l=1}^{k-1} \lambda_l \nabla^j u_{k-l}(0)\Big\|_{\ell^1} \\ \leq C_\lambda C_u \frac{r^j R^k (j+k+1)!}{(j+k+2)^m} \sum_{l=1}^{k-1} \underbrace{\frac{l!(j+k-l+1)!}{(j+k+1)!}}_{=\binom{j+k+1}{l}^{-1} \leq 1} \frac{(k+j+2)^m}{(l+2)^m (k-l+j+1)^m}.\end{aligned}$$

Hence, by Lemma 7.1.12,

$$\Big\|\sum_{l=1}^{k-1} \lambda_l \nabla^j u_{k-l}(0)\Big\|_{\ell^1} \leq C C_\lambda C_u \frac{3^m}{4^m} \frac{r^j R^k (j+k+1)!}{(j+k+2)^m}.$$

Once C_λ and C_u are fixed, the constant $C C_\lambda C_u \frac{3^m}{4^m}$ is smaller than ϵC_u for m large enough.

It remains to estimate

$$\left\| \nabla^j \left[x \mapsto \sum_{n=2}^{k+1} \sum_{l=0}^{k+1-n} \frac{\widetilde{\Delta}^n(x)}{n!} (u_l(y) b_{k+1-n-l}(x,y,\overline{y}))\Big|_{(y,\overline{y})=(x,\overline{y}_c(x))} \right]_{x=0} \right\|_{\ell^1}.$$

By (27), one has

$$\begin{aligned}\left\| \nabla^j \left[x \mapsto \sum_{n=2}^{k+1} \sum_{l=0}^{k+1-n} \frac{\widetilde{\Delta}^n(x)}{n!} (u_l(y) b_{k+1-n-l}(x,y,\overline{y}))\Big|_{(y,\overline{y})=(x,\overline{y}_c(x))} \right]_{x=0} \right\|_{\ell^1} \\ \leq C_u C_b \frac{r^j R^k (j+k+1)!}{(j+k+2)^m} \sum_{n=2}^{k+1} R \left(\frac{\kappa r^2}{R}\right)^n \sum_{l=0}^{k+1-n} \sum_{i_1=0}^{2n} \sum_{j_1=0}^{j} \\ \frac{(2n)! j! A(i_1,j_1,l,n)(k+1-n-l+2n-i_1+j-j_1)!}{3^{k+1-n-l+2n-i_1+j-j_1} i_1!(2n-i_1)! j_1!(j-j_1)! n!(k+j+1)!} \\ \times \frac{(k+j+2)^m}{(i_1+l+j_1+1)^m (k+2+n-l-i_1+j-j_1)^m}.\end{aligned}$$

Let us prove, similarly to the control on λ_k, that

$$\frac{(2n)! j! A(i_1,j_1,l,n)(k+1-n-l+2n-i_1+j-j_1)!}{3^{k+1-n-l+2n-i_1+j-j_1} i_1!(2n-i_1)! j_1!(j-j_1)! n!(k+j+1)!} \leq 2^n.$$

Again,

$$\frac{(k+1-n-l+2n-i_1+j-j_1)!}{(2n-i_1)!(j-j_1)!(k+1-n-l)!} \leq 3^{k+1-n-l+2n-i_1+j-j_1},$$

so that

$$\frac{(2n)!j!A(i_1,j_1,l,n)(k+1-n-l+2n-i_1+j-j_1)!}{3^{k+1-n-l+2n-i_1+j-j_1}i_1!(2n-i_1)!j_1!(j-j_1)!n!(k+j+1)!} \leq \frac{(2n)!j!A(i_1,j_1,l,n)(k+1-n-l)!}{i_1!j_1!n!(k+j+1)!}.$$

If $i_1 \leq n$, then $A(i_1,j_1,l,n) = (i_1+j_1+l)!$ so that

$$\frac{(2n)!j!(i_1+j_1+l)!(k+1-n-l)!}{i_1!j_1!n!(k+j+1)!}$$

is increasing with respect to i_1 and j_1. Thus, it is maximal at $i_1 = n$ and $j_1 = j$, so that

$$\frac{(2n)!j!A(i_1,j_1,l,n)(k+1-n-l+2n-i_1+j-j_1)!}{3^{k+1-n-l+2n-i_1+j-j_1}i_1!(2n-i_1)!j_1!(j-j_1)!n!(k+j+1)!} \leq \frac{(2n)!(n+j+l)!(k+1-n-l)!}{n!n!(k+j+1)!} = \binom{2n}{n}\binom{k+j+1}{n+j+l}^{-1} \leq 2^n.$$

If $i_1 \geq n$, then $A(i_1,j_1,l,n) = \max((n+j_1+l)!(i_1-n)!, (j_1+l)!i_1!)$. On one hand,

$$\frac{(2n)!j!(n+j_1+l)!(i_1-n)!(k+1-n-l)!}{n!i_1!j_1!(k+j+1)!}$$

is increasing with respect to j_1 and decreasing with respect to i_1, and at $i_1 = n$, $j_1 = j$, it is equal to

$$\frac{(2n)!(n+j+l)!(k+1-n-l)!}{n!n!(k+j+1)!} = \binom{2n}{n}\binom{k+j+1}{n+j+l}^{-1} \leq 2^n.$$

On the other hand,

$$\frac{(2n)!j!(j_1+l)!i_1!(k+1-n-l)!}{n!i_1!j_1!(k+j+1)!} = \frac{(2n)!j!(j_1+l)!(k+1-n-l)!}{n!j_1!(k+j+1)!}$$

is increasing with respect to j_1. At $j_1 = j$, it is equal to

$$\frac{(2n)!(j+l)!(k+1-n-l)!}{n!(k+j+1)!} \leq \frac{(2n)!(j+l)!(k+1-l)!}{n!n!(k+j+1)} = \binom{2n}{n}\binom{k+j+1}{j+l}^{-1} \leq 2^n.$$

Thus,

$$\begin{aligned}
&\left\| \nabla^j \left[x \mapsto \sum_{n=2}^{k+1} \sum_{l=0}^{k+1-n} \frac{\widetilde{\Delta}^n(x)}{n!} (u_l(y) b_{k+1-n-l}(x,y,\overline{y})) \Big|_{(y,\overline{y})=(x,\overline{y}_c(x))} \right]_{x=0} \right\|_{\ell^1} \\
&\qquad \leq C_u C_b \frac{r^j R^k (j+k+1)!}{(j+k+2)^m} \times \sum_{n=2}^{k+1} R \left(\frac{2\kappa r^2}{R} \right)^n \\
&\qquad \times \sum_{l=0}^{k+1-n} \sum_{i_1=0}^{2n} \sum_{j_1=0}^{j} \frac{(k+j+2)^m}{(i_1+l+j_1+1)^m (k+2+n-l-i_1+j-j_1)^m} \\
&\qquad \leq C_u C_b \frac{r^j R^k (j+k+1)!}{(j+k+2)^m} \sum_{n=2}^{k+1} R \left(\frac{2\kappa r^2}{R} \right)^n \\
&\qquad \times \sum_{l=0}^{k+1-n} \sum_{i_1=0}^{2n} \sum_{j_1=0}^{j} \frac{(k+j+n+2)^m}{(i_1+l+j_1+1)^m (k+2+n-l-i_1+j-j_1)^m}.
\end{aligned}$$

By Lemma 7.1.12, there exists $C > 0$ such that, for m large enough, one has

$$\begin{aligned}
&\left\| \nabla^j \left[x \mapsto \sum_{n=2}^{k+1} \sum_{l=0}^{k+1-n} \frac{\widetilde{\Delta}^n(x)}{n!} (u_l(y) b_{k+1-n-l}(x,y,\overline{y})) \Big|_{(y,\overline{y})=(x,\overline{y}_c(x))} \right]_{x=0} \right\|_{\ell^1} \\
&\qquad \leq C C_u C_b \frac{r^j R^k (j+k+1)!}{(j+k+2)^m} \sum_{n=2}^{k+1} R \left(\frac{2\kappa r^2}{R} \right)^n.
\end{aligned}$$

Thus, for R large enough,

$$\begin{aligned}
&\left\| \nabla^j \left[x \mapsto \sum_{n=2}^{k+1} \sum_{l=0}^{k+1-n} \frac{\widetilde{\Delta}^n(x)}{n!} (u_l(y) b_{k+1-n-l}(x,y,\overline{y})) \Big|_{(y,\overline{y})=(x,\overline{y}_c(x))} \right]_{x=0} \right\|_{\ell^1} \\
&\qquad \leq \epsilon C_u \frac{r^j R^k (j+k+1)!}{(j+k+2)^m}.
\end{aligned}$$

To conclude, for every $\epsilon > 0$, there exists C_u, C_λ, m, r, R, such that one can proceed in the induction with

$$\|\nabla^j g_k(0)\|_{\ell^1} \leq \epsilon C_u \frac{r^j R^k (j+k+1)!}{(j+k+2)^m}.$$

Then, one can apply Lemma 9.1.4 since u_k is given by the transport equation

$$\widetilde{\nabla}(x) b_0(x,x,\overline{y}_c(x)) \cdot \widetilde{\nabla} u_k(x) = g_k(x) + h(x) u_k(x),$$

where again $h : x \mapsto \widetilde{\Delta}(x) b_0(x,x,\overline{y}_c(x)) - \lambda_0$. Hence, there exists $C(b_0, \varphi)$ such that

$$\|\nabla^j u_k(0)\|_{\ell^1} \leq \epsilon C(b_0,\varphi) C_u \frac{r^j R^k (j+k)!}{(j+k+1)^m}.$$

If ϵ is chosen such that $\epsilon < C(b_0,\varphi)^{-1}$, one can conclude the induction.

Third step.

We successfully constructed and controlled the sequences $(\lambda_k)_{k\geq 0}$ and $(u_k)_{k\geq 0}$ which satisfy (24) at every order. Let us now prove that u_k is controlled on a small neighbourhood of 0.

In the second step, we controlled the functions u_k as follows, *at zero*:

$$\|\nabla^j u_k(0)\|_{\ell^1} \leq C_u \frac{(2r)^j (2R)^k j!k!}{(j+k+1)^m}.$$

Since u_k is real-analytic, in a small neighbourhood of zero, it is given by the power series

$$u(y) = \sum_\nu \frac{\partial^\nu u(0)}{\nu!} y^\nu.$$

Since

$$\frac{\partial^\nu u(0)}{\nu!} \leq C_u (2R)^k k! \frac{|\nu|!}{\nu!} (2r)^{|\nu|} \leq C_u (2R)^k k! (2rd)^{|\nu|},$$

the power series above converges for $y \in P(0, (2rd)^{-1})$, the polydisk centred at zero with radius $(2rd)^{-1}$. Moreover, for every $a < 1$, there exists $C(a)$ such that

$$\sup_{P(0,a(2rd)^{-1})} |u_k| \leq C(a) C_u (2R)^k k!.$$

In particular, by Proposition 7.1.14, for every $a < \frac{1}{2}$, there exists $C(a)$ such that

$$\|a\|_{H\left(-d, \frac{2d^2 r}{a}, P(0, \frac{a}{2rd})\right)} \leq C(a) C_u (2R)^k k!.$$

In other terms, letting $V = P(0, a(2rd)^{-1})$, for every $j \geq 0$, one has

$$\|a\|_{C^j(V)} \leq C(a) C_u \frac{(2R)^k (\frac{2d^2}{a} r)^j j!k!}{(j+1)^{-d}}.$$

In particular, u is an analytic symbol on V. □

We are now in position to perform an analytic summation.

Proposition 9.2.3. *For $c > 0$ and $c' > 0$ small, one has*

$$\left\| \left(T_N(f) - \sum_{j=0}^{cN} N^{-j-1} \lambda_j \right) \left(\psi_0^N e^{N\varphi} \sum_{k=0}^{cN} N^{-k} u_k \right) \right\|_{L^2} = O(e^{-c'N}).$$

Proof. Let $c > 0$. By construction, in a small neighbourhood V of zero (outside of which the result is trivial), there holds

$$\begin{aligned}
&\left(T_N(f) - \sum_{j=0}^{cN} N^{-j-1} \lambda_j \right) \left(\psi_0^N e^{N\varphi} \sum_{k=0}^{cN} N^{-k} u_k \right)(x) \\
&\qquad = - \sum_{j=0}^{cN} \sum_{k=cN-j}^{cN} N^{-1-j-k} \psi_0^N(x) e^{N\varphi(x)} \lambda_j u_k(x) \\
&\qquad\qquad + \sum_{j+k \leq cN} N^{-1-j-k} \psi_0^N(x) e^{N\varphi(x)} R(j,k,N)(x),
\end{aligned}$$

where $R(j,k,N)$ is the remainder at order $cN-k-j$ in the stationary phase Lemma applied to

$$N^{2d}\lambda_j e^{-N\varphi(x)}\int_{y\in M} e^{-N\Phi_1(x,y,\overline{y},0)+N\varphi(y)}(u*b)_k(x,y,\overline{y})\mathrm{d}y.$$

Since $\lambda * u$ is an analytic symbol by Proposition 7.2.8, we have, for $c>0$ and $c'>0$ small enough,

$$\left\|\sum_{j=0}^{cN}\sum_{k=CN-j}^{cN} N^{-1-j-k}\lambda_j u_k\right\|_{L^\infty(V)} \leq Ce^{-c'N},$$

so that

$$\left\|\left(\sum_{j=0}^{cN}\sum_{k=cN-j}^{cN} N^{-1-j-k}\lambda_j u_k(x)\right)\psi_0^N(x)e^{N\varphi(x)}\right\|_{L^2(V)} \leq Ce^{-c'N}.$$

The remainder $R(j,k,N)$ can be estimated using Proposition 7.3.3. Indeed, let $r>0$ and $R>0$ be such that $u\in S_4^{r,R}(V)$ and $b\in S_4^{r,R}(V)$. By Proposition 7.2.8, $u*b$ is an analytic symbol of the same class, so that

$$\|(u*b)_k\|_{C^j(V)} \leq CC_uC_bR^kr^j(j+k)! \leq (CC_uC_b(2R)^kk!)(2r)^jj!.$$

In particular, $(u*b)_k$ admits a holomorphic extension to a k-independent complex neighbourhood $\widetilde{V}$ of V, with

$$\sup_{\widetilde{V}}|(u*b)_k| \leq CC_uC_b(2R)^kk!.$$

In particular, by Proposition 7.3.3, one has, for some $c_1>0$, that the remainder at order c_1N in the stationary phase Lemma applied to

$$N^{2d}\lambda_j e^{-N\varphi(x)}\int_{y\in M} e^{-N\Phi_1(x,y,\overline{y},0)+N\varphi(y)}(u*b)_k(x,y,\overline{y})\mathrm{d}y$$

is smaller than $CC_uC_b(2R)^k(2R)^jj!k!e^{-c'N}$. In particular,

$$\left(\frac{1}{n!}\widetilde{\Delta}(x)^n((u*b)_kJ)(y_c)\right)_n$$

is an analytic symbol in a fixed class, with norm smaller than $C(2R)^kk!$.

If $j+k<\frac{1}{2}cN$, we will compare $R(j,k,N)$ to the remainder at order c_1N. If $j+k\geq\frac{1}{2}cN$, we will compare $R(j,k,N)$ to the remainder at order 0.

Without loss of generality, $c<c_1$. Then, for all j,k such that $j+k<\frac{1}{2}cN$, since the expansion in the stationary phase

$$\sum_{n=cN-j-k}^{c_1N}(n!N^{d+n})^{-1}\widetilde{\Delta}(x)^n((u*b)_kJ)(y_c)$$

corresponds to an analytic symbol, then by Lemma 7.2.6 this sum is $O(e^{-c'N})$; thus if $j+k<c/2$ one has

$$R(j,k,N)\leq Ce^{-c'N}.$$

If $\frac{1}{2}cN < j+k < cN$, then, on one hand

$$N^{-1-j-k}\left|N^{2d}\lambda_j e^{-N\varphi(x)}\int_{y\in M} e^{-N\Phi_1(x,y,\overline{y},0)+N\varphi(y)}(u*b)_k(x,y,\overline{y})\mathrm{d}y\right| \leq C\left(\frac{2R}{N}\right)^{j+k}(j+k)!$$

is smaller than $Ce^{-c'N}$ if c is small enough; on the other hand, again

$$\left(\frac{1}{n!}\widetilde{\Delta}(x)^n((u*b)_k J)(y_c)\right)_n$$

is an analytic symbol in a fixed class (with norm smaller than $C(2R)^k k!$), so that, by Proposition 7.2.6, if c is small enough,

$$N^{d-1-j-k}\lambda_j \sum_{n=0}^{cN-j-k}\frac{1}{n!N^n}\widetilde{\Delta}(x)^n((u*b)_k J)(y_c) < C\left(\frac{2R}{N}\right)^{j+k}(j+k)! \leq Ce^{-c'N}.$$

This concludes the proof. □

9.3 Spectral estimates at the bottom of a well

9.3.1 End of the proof of Theorem 9.1

We now prove part 2 of Theorem 9.1. Suppose that $\min(f) = 0$ and that the minimal set of f consists in a finite-number of non-degenerate minimal points $P_1, \ldots, P_j$. At each of these points P_i with $1 \leq i \leq j$, one can construct (see Proposition 9.2.3) a sequence $v_i(N)$ of $O(e^{-c'N})$-eigenfunctions of $T_N(f)$. By construction, if μ denotes the Melin value (see Definition 4.2.7), then, for every $1 \leq i \leq j$ one has

$$T_N(f)v_i(N) = N^{-1}\mu(P_i)v_i(N) + O(N^{-2}).$$

Moreover, from Theorem 4.2, for $\epsilon > 0$ small, the number of eigenvalues of $T_N(f)$ in the interval $[0, \min_{1\leq i\leq j} \mu(P_i) + N^{-1}\epsilon]$ is exactly the number of i's such that P_i minimises μ.

Hence, any normalised sequence of ground states of $T_N(f)$ is $O(Ne^{-c'N})$ close, that is, $O(e^{-(c'-\epsilon)N})$ close, to a linear combination of those $v_i(N)$ whose associated well P_i minimises μ. This concludes the proof.

9.3.2 Tunnelling

The main physical application of Theorem 9.1 is the study of the spectral gap for Toeplitz operators which enjoy a local symmetry. Let us formulate a simple version of this result.

Proposition 9.3.1. *Suppose that* $\min(f) = 0$ *and that the minimal set of* f *consists of two non-degenerate critical points* P_0 *and* P_1*. Suppose further that these wells are* symmetrical*: there exist neighbourhoods* U_0 *of* P_0 *and* U_1 *of* P_1*, and a* ω*-preserving biholomorphism* $\sigma : U_0 \mapsto U_1$*, such that* $\sigma \circ f = f$*.*

Then there exists $c > 0$ *and* $C > 0$ *such that, for every* $N \geq 1$*, the gap between the two first eigenvalues of* $T_N(f)$ *is smaller than* Ce^{-cN}*.*

Proof. Near P_0, one can build a sequence of $O(e^{-c'N})$-eigenvectors as in Proposition 9.2.3, with $c > 0$; near P_1 one can build another sequence of $O(e^{-c'N})$-eigenvectors. Since M and f are equivalent near P_0 and near P_1, the associated sequences of eigenvalues are identical up to $O(e^{-c'N})$, and the approximate eigenvectors are orthogonal with each other since they have disjoint support, so that there are at least two eigenvalues in an exponentially small window near the approximate eigenvalue. As above (see Theorem 4.2), there are no more than two eigenvalues in the window $[\min Sp(T_N(f)), \min Sp(T_N(f)) + \epsilon N^{-1}]$, for ϵ small; hence the claim. □

Unfortunately, the actual spectral gap between two symmetrical wells cannot be recovered from Proposition 9.2.2 or the solution φ of the Hamilton-Jacobi equation.

Proposition 9.3.2. *Suppose that* $\min(f) = 0$ *and that the minimal set of* f *consists of two symmetrical wells. Let* λ_0 *and* λ_1 *denote the two first eigenvalues of* $T_N(f)$ *(with multiplicity), and let*

$$\sigma = \liminf_{N\to+\infty}\big(-N^{-1}\log(\lambda_1 - \lambda_0)\big).$$

Then σ *is unrelated to the best possible constant* c' *in Proposition 9.2.2, and unrelated to the solution* φ *of the Hamilton-Jacobi equation.*

Proof. We first let $\chi : [-1, 1] \mapsto \mathbb{R}$ be an even smooth function; we suppose that χ reaches its minimum only at -1 and 1, with $\chi(-1) = 0$ and $\chi'(-1) > 0$. We consider the associated function f on $\mathbb{S}^2$ which is the composition of χ with the height function. Then f is invariant under a rotation around the vertical axis, so that $T_N(f)$ is diagonal in the natural spin basis (which consists of the eigenfunctions for the Toeplitz operator associated with the height function). Among this basis, the states which minimise the energy are the coherent states at the North and South poles, respectively; they have the same energy. In this setting the first eigenvalue is degenerate, and shared between two states which localise at one of the two non-degenerate wells.

Let us give a formal solution to the Hamilton-Jacobi equation. In stereographic coordinates near one of the poles, the symbol reads $g(|r|^2) = g(r\bar{r})$ for some smooth function g from $\mathbb{R}$ to $\mathbb{R}$. The expression $g(rs)$ does not make sense if rs is not a real number, but taking $s = 0$ yields $g(r \times 0) = 0$. A formal solution of $\widetilde{g}(x, \partial\varphi) = 0$ is then given by $\varphi = 0$. This corresponds indeed to the exponential decay of the exact ground states: $\varphi = 0$ means that the ground state decays as fast as the coherent state (they actually coincide).

In the system above, the formal solution of the Hamilton-Jacobi equation yields the correct decay rate. However, from the point of view of Proposition 9.2.2, one has $c' = 0$: if χ is not real-analytic near 1 we cannot hope to perform an analytic summation for the sequence λ_i as in Proposition 9.2.3.

We consider now a smooth perturbation of the function χ above: let $\chi_1 : \mathbb{R} \mapsto [0, 1]$ be a smooth, non-zero function supported on $[0, 1/2]$. If we replace χ with $\chi + \chi_1$ in the previous discussion, we still get a symbol invariant under vertical rotation, which is diagonal in the spin basis. The Hamilton-Jacobi equation has the same formal solution. However, the two candidates for the ground state now have different energies, with an exponentially small but non-zero gap e^{-cN}. Here, c can be made arbitrarily small by moving the support of χ_1 close to 1. The spectral gap is then not determined by the solution φ of the Hamilton-Jacobi equation. □

10 PERSPECTIVES

The work presented in the previous chapters raises several questions. First of all, in Chapter 5 we treated microlocal ground states in degenerate situations, the most typical one being the case of a principal symbol reaching its minimum on a whole submanifold of the phase space, in a transverse non-degenerate way. In this framework, one should discuss the dynamics at low-energy for such systems; we present some preliminary ideas about this in Section 10.1.

Over the course of Parts I and II, we motivated the semiclassical analysis of Toeplitz operators by the application to spin systems in the large spin limit. However, our results assume that the underlying phase space is fixed, while in actual spin systems the number of particles (dimension of the manifold) is very large compared to the inverse semiclassical parameter. This calls for a spectral and dynamical study of Toeplitz operators under the double limit of a product of n manifolds with $n \to +\infty$, with a line bundle at high tensor power $N \to +\infty$. We give some perspectives on this in Section 10.2.

In Section 10.3 we present broader perspectives on the development of semiclassical and phase-space analysis outside the scope of pseudodifferential calculus. More specifically, a connection should emerge with the study of ordered quantum systems with a large number of particles. In the context of spin systems, a geometrical treatment of this "fixed N, large n" case, at least under hypotheses of local order, might show a connection between the frameworks which is used today by physicists for tackling such problems, and the tools used in the "large N, large n" case.

10.1 Low-energy dynamics for Toeplitz operators

In the course of this thesis, we mostly addressed spectral questions: given a Toeplitz operator $T_N(f)$, what can be said about its eigenvalues and eigenvectors? A related problem concerns the associated *dynamics*, that is, the time evolution

$$u(t) = \exp(itNT_N(f))u(0).$$

Of course, the exact time evolution is determined by the exact spectrum, but some approximate phenomena exhibit different behaviour for one or the other approach. For instance, if a quantum state u is such that $T_N(f)u = \lambda_N u + O(N^{-K})$, then u might not be close to an eigenfunction, unless one can prove that there is only one eigenvalue near λ_N; on the other hand, u will be preserved by the quantum evolution for a long time. This property is often more interesting in physical situations than being close to actual eigenfunctions: if one can prepare a quantum state which is preserved by the time evolution for a sufficiently long time, then the system behaves "as if" it was an eigenstate, whether actual eigenstates are very different or not. This behaviour happens in antiferromagnetic spin systems, on which our work has a direct application. A large number of "metastable states" are observed in some regimes; they coincide with the localised almost eigenfunctions which we build in a perturbative way in Sections 5.4 and 5.5.

In this section we provide a few perspectives about the study of Toeplitz operators from a dynamical point of view, with the objective of giving more hindsight to the context of spin systems as well as Weyl quantization.

10.1.1 Effective low-energy dynamics

From the seminal work of Helffer and Sjöstrand [HS86a], the effective behaviour of quantum states which have low energy for a Hamiltonian which is minimal on a submanifold, is interpreted as depending on an effective potential on this manifold. This effective potential comes from the Born-Oppenheimer approximation: a symplectic reduction of the quadratic part of the symbol at each point of the minimal submanifold yields (longitudinal) slow modes and (transverse) fast modes. One can then expect low-energy states to be close to the ground state in the fast variables. This reduces the dimension of the problem and yields an effective potential.

In Section 5.4 we investigated the spectral point of view of perturbative analysis at the bottom of this effective potential, in a general geometric setting which applies both to Toeplitz and Weyl quantization. This relies on a local symplectic reduction of the problem.

In a series of articles [RN15; Hel+16], the particular case of "magnetic wells" is studied, in low dimension. In this setting, the classical and quantum hamiltonians are integrable, which allows to give precise results on the spectrum as well as on the dynamics, validating the adiabatic approximation. Low-energy states move around the submanifold of minimal energy, following an effective dynamics which one can compute. In the general case, one can try to study the dynamics of quantum states which follow the Born-Oppenheimer approximation.

The first step is to define what the Born-Oppenheimer approximation means at the global level. The normal form of Proposition 5.4.2 certainly fails at the global scale unless the topological structure is very simple: isotropic manifolds cannot be globally seen as open sets of $\mathbb{R}^k$. More importantly, parametric diagonalisation of symmetric matrices fails in the C^∞ category. We performed a reduction modulo q^∞, where q is the variable along the minimal submanifold. This reduction is consistent with the study of states localising at $q = 0$ but not for dynamics. Even if one can exactly diagonalise the transverse quadratic form at the local level, the topology of the minimal set might be an obstruction for global eigenbundles. It is already a challenge to define the geometric and functional aspects of Born-Oppenheimer states at the global level. Crossings of symplectic eigenvalues destroy the energy separation between different spaces with excited transverse components.

To this respect, a particular case consists in corank 1 situations, that is, on a manifold of dimension $2n$, the minimal set is an isotropic submanifold of dimension $n-1$. In this situation, there is only one non-zero symplectic eigenvalue, and it is expected that one can define and study a hierarchy of spaces of quantum states with a transverse excited component, following different effective dynamics.

Once the Born-Oppenheimer space or excited spaces are defined, one can study how the exact quantum dynamics act on them. The separation of local energy scales might lead to an approximation which is valid for a very long time. Indeed, let us consider a model Hamiltonian as follows:

$$A = \begin{pmatrix} 0 & e \\ e & \delta, \end{pmatrix}$$

where the first vector $\binom{1}{0}$ of the canonical basis is an approximate eigenvector, at precision $O(e)$. In first approximation, the time evolution leaves the vector $\binom{1}{0}$ invariant.

Let $b = \frac{\delta}{2e}(1 - \sqrt{1 + 4e^2/\delta^2})$, then the eigenvalues of A are eb and $eb + \sqrt{\delta^2 + 4e^2}$. More precisely, with

$$U = \begin{pmatrix} 1 & -b \\ b & 1 \end{pmatrix},$$

one has

$$A = \frac{1}{1+b^2} U^T \begin{pmatrix} eb & 0 \\ 0 & eb + \sqrt{\delta^2 + 4e^2} \end{pmatrix}.$$

Let us compute $e^{itA}\binom{1}{0}$: it is equal to

$$\frac{1}{1+b^2}\begin{pmatrix} \exp(iteb) + b^2 \exp(iteb + it\sqrt{\delta^2 + 4e^2}) \\ b(\exp(iteb) - \exp(iteb + it\sqrt{\delta^2 + 4e^2})) \end{pmatrix}.$$

The second component is clearly $O(tb\delta) = O(te)$; a time-independent control is $O(b) = O(e/\delta)$. The degree of approximation of the first component is

$$O(b^2) + O(teb) = O(e^2/\delta^2) + O(te^2/\delta).$$

In particular, if the spectral gap δ is large with respect to e, then the approximation, once restricted on the first component, is valid up to timescales $t = \delta/e^2$.

In our setting, we expect δ to be of order N^{-1} and e to be of order $N^{-\frac{3}{2}}$, moreover the time evolution operator is not e^{itH} but rather e^{itNH}. Thus, the simple analysis above predicts that the dynamics will be well understood up to times of order N, which is much larger than the timescales involved in the effective evolution, that is, $N^{\frac{1}{2}}$. Hence, in timescales $o(N)$, the effective evolution is conjectured to be non-trivial, and to be a good approximation for the exact dynamics.

10.1.2 Scattering at crossing points

In Section 5.5 we extended the subprincipal perturbative analysis to the case of two manifolds crossing at a point. We found out that the ground state localises at the crossing point (when it is a local minimum for the Melin value). Away from the crossing point, one can use the Born-Oppenheimer setting as before, but this approximation breaks down near the crossing point. The dynamics near the crossing point is unknown. Is it possible for a state which is initially concentrated on one branch, to scatter at the crossing point and to be concentrated on the other branch after some time? Or do the different branches evolve independently of each other in first approximation?

Let us focus on a model case, which is the following Schrödinger operator on $\mathbb{R}^2$:

$$H_\hbar = -\hbar^2\Delta + x^2y^2.$$

We wish to investigate the long-time evolution, under this operator, for an initial state which is prepared following the Born-Oppenheimer approximation, on one of the two branches, say the $\{y = 0\}$ branch. We let $T^*\mathbb{R}^2 = \{(x, y, \xi, \eta) \in \mathbb{R}^4\}$, where ξ and η are the respective momenta for x and y.

The initial state $u(0)$ is supposed to be localised in phase space near $(x_0, 0, 0, 0)$ with $x_0 \neq 0$, and to decay rapidly in the y, η, and ξ directions, so that, one has

$$\langle u(0), H_\hbar u(0)\rangle \leq C\hbar.$$

Let us prove that, at a timescale of order $\hbar^{-\frac{3}{4}}$, the quantum evolution stays confined on the $\{y = 0\}$ axis. This is large with respect to the typical speed of evolution is $\hbar^{-\frac{1}{2}}$. We let $u(t) = \exp(it\hbar^{-1}H_\hbar)u(0)$, and we let $\chi : \mathbb{R} \mapsto [0, 1]$ denote a smooth function such that $\chi = 0$ in an open neighbourhood of zero and $\chi = 1$ near infinity. We wish to control the quantity

$$\langle u(t), \chi(y)u(t)\rangle.$$

on large timescales. At time zero one has

$$\langle u(0), \chi(y)u(0) \leq C\exp(-c\hbar^{-1})\rangle.$$

From

$$\frac{-1}{\hbar^2}[H_\hbar, [H_\hbar, \chi(y)]] = Op_W^\hbar(-4\chi''(y)\eta^2 + 2\chi'(y)yx^2)$$

and the Fefferman-Phung estimate, one has, for every $\alpha > 0$, that

$$\left|\frac{\partial^2}{\partial t^2}\langle u(t), \chi(y)u(t)\rangle\right| \leq C\alpha\langle u(t), \eta^4 + y^4x^4u(t)\rangle + C\alpha^{-1}\langle u, \chi(y)u\rangle + C\hbar^2.$$

Taking $\alpha = \langle u, \chi(y)u\rangle^{\frac{1}{2}}\hbar^{-1}$ and letting $T = \hbar^{\frac{1}{2}}t$, one has

$$\left|\frac{\partial^2}{\partial T^2}\langle u, \chi(y)u\rangle\right| \leq C\langle u, \chi(y)u\rangle^{-\frac{1}{2}} + C\hbar.$$

One then has

$$\langle u(T), \chi(y)u(T)\rangle \leq C\hbar^{-1}(1 + T)^4.$$

Hence, the solution does not leave the x branch up to times $t \approx \hbar^{-\frac{3}{4}}$.

In this simple model, the evolution is confined on the branch on which it began. We conjecture that, once perturbations are added, the time evolution stays confined on one branch; but the effective evolution at the crossing point is still unknown.

10.1.3 Exponential confinement

In Section 8.6 we proved Agmon estimates in the forbidden region for exact eigenstates of Toeplitz operators with analytic symbols (on an analytic Kähler manifold). The study of exponential confinement in dynamics should begin with an analytic version of the Egorov theorem: states which are prepared with exponential decay, still decay exponentially fast after some finite time evolution, the support being pushed by the classical dynamics.

In the setting of subprincipal effective dynamics, one can ask whether the effective contribution of the Melin value acts as an energy barrier at exponential precision: do evolved states stay exponentially confined on the connected component of the sublevel of the Melin value on which they are initially concentrated, in polynomial timescales?

Here, we should make precise what we mean by "exponential decay". In Part II we obtained $O(e^{-cN})$ estimates, which we called exponential decay. However, following the change of semiclassical parameter for the effective operator in the Born-Oppenheimer approximation, one should expect $O(e^{-c\sqrt{N}})$ decay, as was proved in the Schrödinger case [HS86a] for position observables.

10.1.4 The Melin value for spin systems

The Melin value of Definition 5.1.1 is of utmost relevance in the study of subprincipal effects, for the spectrum as well as for the dynamics.

We recall that an important application of our subprincipal estimates is the study of frustrated antiferromagnetic system: given a graph G made of triangles, we consider on $(\mathbb{S}^2)^{\times|G|}$ the symbol $\sum_{e\sim f}(x_e x_f + y_e y_f + z_e z_f)$. Then the minimal set consists (when such configurations can be reached) in situations where, on any triangle in the graph, the spins at its extremities form a great equilateral triangle on the sphere. Along this set, the Melin value μ is not constant, so that quantum selection takes place.

However, even in the particular context of frustrated antiferromagnetic spin systems on triangle grpahs, an explicit derivation of the Melin value μ, for every configuration, is unknown. When the triangles form loops, the classical minimal set is not a smooth manifold and its parametrisation is already a challenge. But even in the simple case of a chain of triangles, where the classical minimal set is parametrised by a sequence of angles $\theta_1, \dots, \theta_n$, the Melin value μ as a function of $\theta_1, \dots, \theta_n$ is not known.

In Appendix A.2 we discuss a few numerical results about the computation, and the minimisation, of μ. We are currently able, given a classical minimal configuration on any triangle graph, to compute a numerical value of μ. However, the constraint minimisation problem of finding the minimum of μ given that the principal symbol is minimal, is not stable in our current implementation and needs further work. However, our preliminary results confirm the physical intuition that μ is minimal when all spins are coplanar.

10.2 Large dimension and thermodynamics

The work presented here applies to finite-volume spin systems. We left aside questions of increasing dimension. An informal question is: how does the semiclassical limit behave with respect to the limit of a large number of particles? In the setting of spin systems, the low-temperature behaviour of certain spin systems (Heisenberg Ferromagnetic) was studied [CG12; CGS14; CGS16; CGS15] under the triple limit: spin goes to infinity, number of particles goes to infinity, temperature goes to zero. The techniques used rely heavily on the particular form of the Hamiltonian, and are not stable by perturbation. One can hope to give, in the context of spin systems with typical classical low-energy landscape: ferromagnetic (symplectic), or antiferromagnetic/nematic (isotropic), results about the validity, in the limit of the large number of particles, of the considerations of Chapter 4 and Chapter 5. The case of interacting, coercive wells (which stay non-degenerate as the dimension grows, contrary to (anti)ferromagnetic situations) was treated in the context of Schrödinger operators [HS92], where uniform controls on the tunnelling rate are computed.

In this section we discuss a few hints about the concentration properties of on large products.

10.2.1 Quadratic case

In this section we study *coercive* quadratic wells in large dimension, under the hypothesis of local interactions.

For the simplicity of the discussion we place ourselves in the 1D case, and we assume *translational invariance*, that is, on a manifold $M \times M \times \ldots \times M$, a symbol of the form

$$h_n = h(x_1, x_2) + h(x_2, x_3) + \ldots + h(x_{n-1}, x_n) + h(x_n, x_1).$$

This "nearest neighbour interaction" contains in fact all finite-distance Hamiltonians on 1D spin systems (in which case M is a fixed product of spheres $\mathbb{CP}^1$).

The dynamical assumption is as follows: there exists $P_0 \in M$ such that, for every n, $(P_0, \ldots, P_0)$ is a non-degenerate minimum of h_n. We suppose further that the quadratic part is bounded from below independently on n. This assumption excludes, for instance, the Ising model.

In this section we study the quadratic model operator for the previous model, which is, given a $4d$-dimensional positive quadratic form Q, the operator on the Bargmann space with symbol

$$Q_n = \sum_{j=1}^{n} Q(x_j, x_{j+1}),$$

where $x_{n+1} = x_1$ by convention.

We introduce at this point the discrete Fourier transform, which is the element of $U(n)$ with entries

$$F_{jk} = \frac{1}{\sqrt{n}} e^{\frac{2i\pi jk}{n}}.$$

From F we deduce a unitary change of variables on $\mathbb{C}^{dn} = \mathbb{C}^n \otimes \mathbb{C}^d$ by $F \otimes Id$. Unitary change of variables preserve the Bargmann kernel, and the quadratic form Q_n is block-diagonal in the new variables, the variables of frequency j interacting only with themselves and with the variables of frequency $-j$. Indeed, let us decompose

$$Q(z) = \langle z, Bz \rangle + 2\Re\langle \overline{z}, Az \rangle,$$

with B Hermitian and A acting on two variables in $\mathbb{C}^d$, so that

$$B = \begin{pmatrix} B_{1,1} & B_{1,2} \\ B_{2,1} & B_{2,2} \end{pmatrix}$$
$$A = \begin{pmatrix} A_{1,1} & A_{1,2} \\ A_{2,1} & A_{2,2} \end{pmatrix}$$

Then, in the new variables,

$$Q_n(F(\hat{x})) = \frac{1}{n} \sum_{j,k,l=1}^{n} \langle e^{\frac{-2i\pi jk}{n}} \hat{x}_k, \hat{B}_{k,l} e^{\frac{-2i\pi jl}{n}} \hat{x}_l \rangle + 2\Re\langle e^{\frac{2i\pi jk}{n}} \overline{\hat{x}_k}, \hat{A}_{k,l} e^{\frac{-2i\pi jl}{n}} \hat{x}_l \rangle.$$

Here

$$\hat{B}_{k,l} = B_{1,1} + e^{\frac{2i\pi(k-l)}{n}} B_{2,2} + e^{\frac{2i\pi k}{n}} B_{1,2} + e^{-\frac{2i\pi l}{n}} B_{2,1}$$
$$\hat{A}_{k,l} = A_{1,1} + e^{\frac{-2i\pi(k+l)}{n}} A_{2,2} + e^{\frac{-2i\pi k}{n}} A_{1,2} + e^{-\frac{2i\pi l}{n}} A_{2,1}$$

With k and l fixed, the sum over j cancels out unless $k = \pm l$, so that

$$Q_n(F(\hat{x})) = \sum_{k=1}^{n} \langle \hat{x}_k, \hat{B}_{k,k}\hat{x}_k \rangle + 2\Re\langle \overline{\hat{x}}_k, \hat{A}_{k,-k}\hat{x}_{-k} \rangle$$

The matrices $\hat{B}_{k,k}$ are Hermitian positive definite.

The coercive hypothesis states that the blocks appearing in $Q_n(F)$ are not only bounded from above but also from below, so that they are included in a compact set of $S^{++}(2d) \cup S^{++}(4d)$.

In this situation, one can prove that the associated ground state localises independently on n. Indeed:

Proposition 10.2.1. *Let Q be a compact family of definite positive quadratic forms on $\mathbb{R}^{2k}$, identified with $\mathbb{C}^k$.*

Then there exists a compact family of real numbers $\lambda_1, \dots, \lambda_n$, and a compact family of symplectic matrices S such that $S^T Q S = \mathrm{diag}(\lambda_1, \dots, \lambda_n, \lambda_1, \dots, \lambda_n)$.

In particular, in this setting, there exists $c > 0$ and $C > 0$ such that the ground state u of $T_1(Q)$ satisfies

$$u \leq C e^{-c|x|^2},$$

uniformly in Q.

In the general case of local inteactions with coercive quadratic part, we hope to build approximate eigenvectors near the bottom of the well, in the regime where the inverse semiclassical parameter N grows along with the number of sites n, at least in the case $n \geq N^K$ for some $K \geq 0$.

10.2.2 Positivity estimates

Once almost eigenvectors are built, it remains to prove that they indeed correspond to the bottom of the spectrum. We insist that, as the typical energy will be of order nN^{-1}, as soon as n is large with respect to N, the trivial lower bound $h \geq 0 \Rightarrow T_N(h) \geq 0$ of Proposition 2.2.9 will only yield a very weak form of localisation. In this setting, the energy lift from the quadratic part of the energy is large, so that Melin-type inequalities could be a crucial element in the discussion. Unfortunately, the tools which we developed in Section 5.2 do not adapt to the dimension-independent case.

We hope to tackle this problem by using the fact that the total symbol h is a sum of symbols which depend only on a bounded number of variables. In this setting, there is no need to control the Szegő or Bergman kernel on a manifold of growing dimension. The only remaining issue is then the cutting of the manifolds into small parts (Lemma 5.2.1), where the control is not uniform in the dimension. With special care, one should be able to give lower bounds under the assumptions of local interactions, translation invariance and coercivity.

10.2.3 Degenerate cases

Even a system as simple as the quantum Heisenberg model does not fit into the coercive case of Subsection 10.2.1. In addition of the non-degeneracy of the quadratic form if the set of classical minimal energy is degenerate, there might be modes with low spacial frequency which have small contribution to the energy. At this stage we make an interesting distinction between the ferromagnetic and antiferromagnetic situation, taking the Ising model as an example.

For the ferromagnetic Heisenberg model, the symbol is $-\sum_{i=1}^{n}(x_i x_{i+1}+y_i y_{i+1}+z_i z_{i+1})$, and the manifold of configurations with minimal classical energy is the space of configurations where all spins are aligned (parametrized by $\mathbb{S}^2$). Near a minimal configuration, in the stereographic chart, the Hessian reads

$$\sum_{i=1}^{n}(x_{i+1}-x_i)^2+(y_{i+1}-y_i)^2.$$

The discrete Fourier transform reduces this quadratic form into blocks of size 2×2, which are $\frac{j}{n}Id$ for $1\leq n\leq j$. Though some classical frequencies are very small, corresponding to low-frequency modes, the ground state of this operator is the coherent state at 0, which localises at 0 in the ℓ^2 sense as before. In this situation, provided that the Fourier components of the next-order terms decay at least as fast as those of the quadratic part, we expect to be able to generalise the perturbative construction of eigenstates.

In the antiferromagnetic case, the symbol is $\sum_{j=1}^{n}(x_i x_{i+1}+y_i y_{i+1}+z_i z_{i+1})$, so that classical minimal configurations follow the Néel order, if n is even.

The associated quadratic form in a stereographic chart, in this case, is

$$\sum_{i=1}^{n}(x_{i+1}-x_i)^2+(y_{i+1}+y_i)^2.$$

Contrary to the previous situation, the ground state of this operator is squeezed by a factor n in the direction of the smallest energy in the x direction, since the low-energy directions in the x and in the y variables are symplectic orthogonals.

We hope to help in the classification of spin systems, by providing formal proofs or obstructions to localisation properties, depending on geometric conditions on the minimal set. Partial results are known for particular systems (see next subsection), but no study of general finite-distance spin systems was performed.

10.2.4 Spin systems with growing spin and growing number of sites

The semiclassical limit of spin systems with growing number of sites is an active domain, which (up to now) evolves somewhat independently of usual semiclassical analysis. Bounds for the energy of quantum states [Lie73] were developed quite early; in the article above they are a particular case of the bound $T_N(f)\geq \min(f)$ for Toeplitz operators. An intuition of coherent state representation emerged and proved useful in the treatment of thermodynamic properties such as long range order or phase transitions [FL77; FL78; NP85] in the double limit: semiclassical (large spin) and thermodynamical.

In particular, in the last decades, partial results emerged in the mathematical justification of "linear spin-wave approximation" in this setting, that is, the validity of

the order 2 Taylor approximation in the last subsections for the ground state energy. This was mostly performed in coercive situations [CS90; MN04] or in the Heisenberg Ferromagnetic case [HBW84; NP85; BB89; MN03; CG12; CGS15; CGS16], where the system enjoys additional symmetries. In one case [MN03], a weaker form of coercivity was performed: the model Hamiltonian was a non-coercive quadratic form (with a degenerate space), plus a term of the form $\max(|z_j|^2)$, so that the minimum of the classical energy is reached only at zero.

This quadratic approximation already yields surprisingly good results even at low spin: in the Heisenberg Antiferromagnetic spin chain at spin 1/2, the exact ground state is known by exact methods (Bethe Ansatz), and the energy of the quadratic model operator (that is, the correction given by the Melin value) has an error of only 8%. This motivates further the question of perturbative analysis, that is, incorporating larger-order terms in the Taylor expansion near the classical minimum.

10.3 Product states and large curvature

Coherent states are an essential element in Toeplitz quantization. They are used to define the quantum operator associated with a symbol (through the Bergman or Szegő kernel which is only the scalar product between coherent states) and allow one to visualise quantum states as functions on the whole phase space, being a generalisation of the FBI transform.

The limit of a large number of quantum particles is often treated as a semiclassical limit in the physics literature, in contexts where the quantum state under study is presumed to enjoy "local order". With the point of view of renormalisation, replacing boxes of identical states with a unique state decreases the semiclassical parameter. For instance, given the "product state" application from $\mathbb{CP}^1$ to $\mathbb{CP}^N$ which sends $[1 : z]$ to $[1 : z : z^2 : \ldots : z^N]$, the pull-back of the Fubini-Study form on $\mathbb{CP}^N$ is N times the Fubini-Study form on $\mathbb{CP}^1$; as N grows, this copy of $\mathbb{CP}^1$ endures a semiclassical limit in the sense of Toeplitz quantization.

Let E denote a fixed Hilbert space, which we will see as a single-particle space. We are interested in particular operators on $E^{\otimes N}$ for N large. To what extent can *constant product states*, of the form $\psi \otimes \psi \otimes \ldots \otimes \psi$ for $\psi \in E$, be considered as coherent states, from which one can study the quantum system as in a semiclassical limit?

We must separate two radically different cases: bosonic statistics (with applications to Bose-Einstein condensates) and distinguishable particles (with applications to spin systems).

If the Hamiltonian on $E^{\otimes N}$ is invariant under exchange of particles, one can study the reduced problem on the symmetrical tensor space $E^{\otimes N}_{sym}$. In the limit $N \to +\infty$, this space enjoys a form of semiclassical limit. Indeed, at the formal level, the total entanglement of a particle with other particles is bounded, and since the total state is symmetrical, this entanglement is distributed over the whole space so that observables acting on a fixed number of particles see a disentanglement. Ideas from semiclassical analysis have been successfully applied to mean-field asymptotics [LNR14; LNR16; LNR17].

In the case of spin systems, where the particles cannot be exchanged with each other as they have a fixed position, a result of the type above is clearly false. A state

as simple as $a \otimes b \otimes a \otimes b \ldots$ cannot be approximated by mixed constant product states. Entanglement to neighbours does not disappear for ground state of simple spin systems in the large N limit such as the Bethe state, which is the ground state of the spin $\frac{1}{2}$ antiferromagnetic chain. To account for local entanglement, one should consider more general Ansätze, such as MPS or PEPS [VCM08]. There is recent interest in these families of states in the physics community, but the underlying mathematical treatment remains yet to be performed.

APPENDIX

A

SPIN SYSTEMS AS TOEPLITZ OPERATORS

This appendix is devoted to a particular application of our work to the spectral study of spin systems in the large spin limit. In Section A.1, we present part of our work (corresponding to Part I of this manuscript) in the language of condensed matter physics; this section corresponds to our article [Del18a]. Then, in Section A.2, we present a few unpublished developments about the Melin value (see Definition 4.2.7), including numerical considerations.

A.1 Order by disorder on spin systems

A.1.1 Introduction

Order by disorder

The understanding of low-energy states of non-integrable quantum systems is a notoriously difficult task, with applications to the design of both quantum and regular computers, supraconductivity as well as superfluidity. In particular, the Anderson RVB model for high T_c supraconductivity [And73] has drawn attention to frustrated quantum spin systems.

In an effort to tackle this problem from a theoretical perspective, various approximation procedure are used, such as restriction to finite size systems [Lec+97; Wal+98; DMS12] or generalizations to $SU(N)$ with N large [Sac92]. In this appendix we are interested in semiclassical methods [HKB92; Chu92; DS98], which are inspired by Villain's "order by disorder" principle [Vil+80].

This approach is motivated by the fact that, for frustrated spin systems, the classical minimal set does not consist of a single class of configurations given by a global symmetry. Spin ices [And56; Mat+02; Har+97; Lag+10] feature a discrete set of classical minimal configurations, with extensive cardinality. For the Heisenberg AntiFerromagnetic model (HAF) on the Kagome lattice (see Figure 9), they form a continuous set which is not regular: the dimension of allowed infinitesimal moves is not constant on this set.

The idea behind "order by disorder" is that low-temperature classical states, as well as quantum low-energy eigenstates, are not exactly located on the classical minimal set but are spread out; in particular, their energies are shifted up by a factor depending on the behaviour of the classical energy near its minimal set. The flattest the classical energy landscape, the lowest the energy contribution. As a consequence, those states must concentrate only on the subset of the classical minimal set where the local energy landscape is the flattest. In short, the presence of thermal or quantum fluctuations actually restrict the possible locations of low-energy states.

At this point we already make an emphasis on the geometrical data needed to define what it means for the classical energy to be flatter near one minimal point

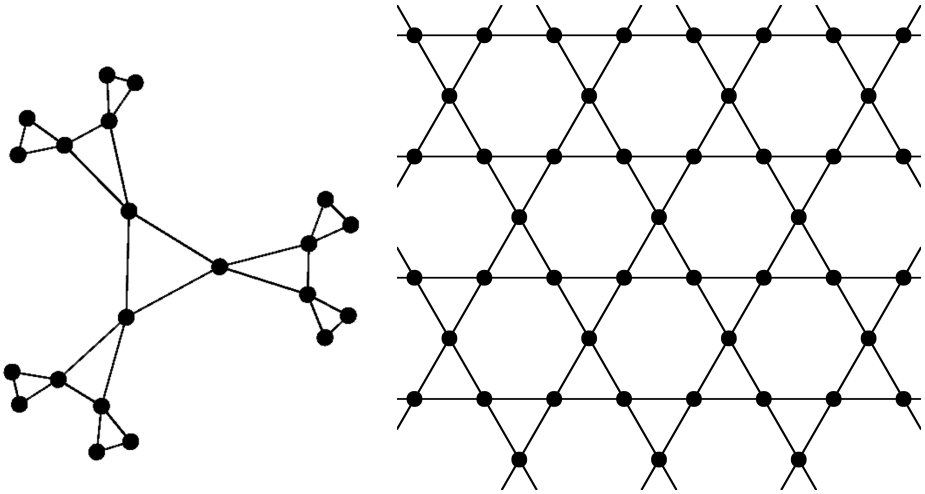

Figure 9: Pieces of the Husimi tree (left) and the Kagome lattice (right)

than near another. As was already pointed out [DS98], in the setting of classical low-temperature, the Gibbs measure depends on the classical energy itself and the volume element on the phase space. To the contrary, quantum states depend on the symplectic structure on the phase space, which is a finer geometrical notion: some phase space transformations preserve the volume form but not the symplectic structure. Thus, though thermal and quantum selection stem from the same intuition, the "flattest" classical points may not be the same in the two cases.

Results

In this appendix we clarify the process under which quantum selection takes place, and examine the links with thermal selection. A common heuristic states that quantum selection and thermal selection follow the same rules. This intuition, which leads to the claim that on the Kagome HAF low-energy states are coplanar, is sometimes misleading. Another claim states that quantum selection is determined by the classical frequencies in the linear spin-wave approximation. In fact there are additional terms, which do not play a role on antiferromagnetic systems but which appear in more general spin systems. We describe in detail those additional terms.

We report mathematical results, which define a function μ under which quantum selection takes place: as the spin grows, low-energy quantum states localize on the set of phase space on which both the classical energy and this function μ are minimal. We then analyse various model situations of irregular minimal classical sets in order to understand the link with thermal selection.

This appendix is organised as follows: Section A.1.2 presents the general mathematical framework for the treatment of quantum selection in the context of spin systems. In Section A.1.3 we use three toy models to illustrate the concepts and difficulties associated with quantum order by disorder. In Section A.1.4 we analyse practical examples such as the semiclassical HAF on the Kagome lattice. Section A.1.5 presents a discussion of the consequences and applications of our work. Section A.1.6 consists of exact computations which relate spin systems and Toeplitz quantization.

A.1.2 Spin wave frequencies and Toeplitz quantization

In this section we expose the main mathematical ideas behind Toeplitz quantization, which allows one to study spin operators in the large S limit from a rigorous point of view. We report our recent results on the topic and clarify the exact procedure under which quantum selection takes place.

Harmonic oscillators in Bargmann-Fock representation

The point of view of Bargmann on the quantum harmonic oscillator [Bar61; Hus40] is that quantum states should be seen as holomorphic functions on the complex space $\mathbb{C}$ instead of the common choice $L^2(\mathbb{R})$. This idea can in fact be generalized to other phases spaces than $\mathbb{C}$, and allows one to understand the large spin limit as a semiclassical limit from a rigorous point of view. In this section we quickly present the main ideas behind Bargmann quantization on the flat space.

For positive k (which is seen as the inverse Planck constant), holomorphic functions on $\mathbb{C}$ form a Hilbert space B_k with the following scalar product

$$\langle u|v\rangle_{B_k} = \int \overline{u}(z)v(z)\exp(-k|z|^2)dz.$$

We naturally exclude from the space B_k the functions with infinite norm. Examples of functions in B_k are the normalised monomials

$$e_j : z \mapsto \left(\frac{N}{\pi j!}\right)^{\frac{1}{2}} N^{-\frac{j}{2}} z^j$$

which form a Hilbert base of B_k. Under this definition, B_k naturally sits inside the space L_k of all (not necessarily holomorphic) functions which are square-integrable with respect to $\exp(-k|z|^2)$. The orthogonal projector Π_k from L_k to B_k is used to define the quantum harmonic oscillator, which is the following operator on B_k:

$$T_k(|z|^2)|u\rangle = \Pi_k(z \mapsto |z|^2 u(z)).$$

This is a *Toeplitz* operator: the composition of a multiplication operator and a projection. One can informally write

$$T_k(|z|^2) = \Pi_k|z|^2 = \Pi_k|z|^2\Pi_k.$$

The matrix elements between elements of B_k are simply

$$\begin{aligned}\langle u|T_k(|z|^2)|v\rangle_{B_k} &= \langle u, \Pi_k|z|^2\Pi_k v\rangle_{B_k}\\ &= \langle \Pi_k u, |z|^2\Pi_k v\rangle_{B_k}\\ &= \langle u, |z|^2 v\rangle_{B_k}\\ &= \int_{\mathbb{C}} \overline{u}(z)v(z)|z|^2\exp(-k|z|^2)dz.\end{aligned}$$

In particular,

$$\begin{aligned}\langle e_j, T_k(|z|^2)e_{j'}\rangle_{B_k} &= \frac{k}{\pi}\frac{k^{-\frac{j+j'}{2}}}{\sqrt{j!j'!}}\int_{\mathbb{C}} \overline{z}^j z^{j'}|z|^2 e^{-k|z|^2}dz\\ &= \frac{k}{\pi}\frac{k^{-\frac{j+j'}{2}}}{\sqrt{j!j'!}}\iint_{\mathbb{R}^+\times\mathbb{S}^1} r^{j+j'}r^2 e^{-k|r|^2}e^{i(j-j')\theta}d\theta r dr\end{aligned}$$

is zero unless $j = j'$ since

$$\int_{\mathbb{S}^1} e^{i(j-j')\theta} d\theta = 2\pi\delta_j^{j'}.$$

Then

$$\begin{aligned}\langle e_j, T_k(|z|^2)e_j\rangle_{B_k} &= \delta_j^{j'} \frac{2k}{k^j j!} \int_0^{+\infty} r^{2j+2} e^{-k|r|^2} r dr \\ &= \delta_j^{j'} \frac{k}{k^j j!} \int_0^{+\infty} u^{j+1} e^{-ku} du \\ &= \delta_j^{j'} k^{-1}(j+1).\end{aligned}$$

Hence, the normalised monomials e_j are eigenfunctions of this operator, with eigenvalues $k^{-1}(j+1)$. This contrasts with the $L^2(\mathbb{R})$ point of view on the harmonic oscillator, where the eigenvalues are the half-integers $\hbar(j+\frac{1}{2})$ and the eigenfunctions are Hermite functions. This does not mean that this Toeplitz operator is not natural, or that other terms should be added; in experiments one can only measure gaps between eigenvalues, which coincide for the two settings.

The definition of the Bargmann space and the Toeplitz operator can be generalized. The scalar product $\langle\cdot|\cdot\rangle_{B_k}$ has the same definition in the case of several complex variables. If H is any function on $\mathbb{C}^d$ (which represents the classical energy on the phase space $\mathbb{C}^d = \mathbb{R}^{2d}$), the associated Toeplitz operator on B_k is defined as

$$T_k(H)|u\rangle = \Pi_k(z \mapsto H(z)u(z)).$$

This defines a quantization: in the large k limit, one can prove [Cha03] that the commutator $[T_k(H_1), T_k(H_2)]$ becomes close to $-ik^{-1}T_k(\{H_1, H_2\})$. The function H associated with the operator $T_k(H)$, which is unique, is called the *symbol* of $T_k(H)$.

Toeplitz quantization follows anti-Wick order: if the classical energy is written $H : z \mapsto \overline{z}^\alpha z^\beta$, then

$$T_k(H) = k^{-\sum \alpha_i} \partial^\alpha z^\beta.$$

Using this rule, one can compute explicitly the Toeplitz quantization of any polynomial function in the coordinates.

Of great interest are Toeplitz operators associated with semipositive definite forms $Q \geq 0$. As in the harmonic case, the infimum of the spectrum is linked with the classical frequencies, but is shifted with respect to the usual quantization procedure: if $\lambda_1, \ldots, \lambda_r$ are the non-zero classical frequencies for Q, then

$$\mu(Q) := \inf Spec(T_k(Q)) = k^{-1}\left(\frac{1}{2}\sum_{i=1}^r \lambda_i + \frac{1}{4} tr(Q)\right). \tag{28}$$

The factor $tr(Q)$ is specific to Bargmann quantization. In the Weyl representation, one has instead

$$\inf Spec(Op_W^\hbar(Q)) = \frac{\hbar}{2}\sum_{i=1}^r \lambda_i.$$

Toeplitz operators on spheres

Toeplitz quantization can be generalized from $\mathbb{C}^d$ to other phase spaces, using tools of complex geometry [Cha03]. In particular, this allows us to define a quantization procedure on product of spheres: to any classical energy on a product of spheres, and any k, one can associate a quantum operator, acting on the tensor product of spaces $\mathbb{C}^{k+1}$. Previously k was any positive real number, but now it needs to be an integer: the topology of the phase space only allows quantized values of the inverse Planck constant.

Toeplitz operators on product of spheres include spin systems (with spin $S = \frac{k}{2}$). However, the quantization procedure requires some care in the computations as can be seen on Table 1. The computation rules which lead to Table 1 are presented in the Appendix; one can apply these rules without any particular knowledge of advanced complex geometry or the semiclassical tools that are developed in the mathematical literature.

classical	quantum ($S = \frac{k}{2}$)
z	$\frac{k}{k+2} S_z$
x	$\frac{k}{k+2} S_x$
z^2	$\frac{k^2}{(k,3)} S_z^2 + \frac{1}{k+3}$
zx	$\frac{k^2}{2(k,3)} (S_x S_z + S_z S_x)$
$z^2 x$	$\frac{k^3}{(k,4)} S_z S_x S_z + \frac{1}{(k+3)} S_x$
z^3	$\frac{k^3}{(k,4)} S_z^3 + \frac{k(3k+8)}{(k,4)} S_z$

Table 1: Quantization of some symbols on the sphere.
The operator S_z has spectrum $\{-1, -1 + S^{-1}, \dots, 1 - S^{-1}, 1\}$.
We denote $(k, j) = (k + 2)(k + 3) \dots (k + j)$.

Toeplitz quantization on product of spheres contains the semiclassical approach of Lieb [Lie73]: if f is any polynomial in the base coordinates on a product of spheres, $T_k(f)$ is the spin operator whose lower symbol is f. Toeplitz quantization allows one to consider more general symbols than polynomials, in a more geometrical framework. This generalisation is of use even in the treatment of polynomial Hamiltonians: useful change of variables which allow to reduce whole families of problems to a common normal form are often non-polynomial; moreover, results which are stated in the language of Toeplitz quantization are more stable with respect to small perturbations.

The corrective terms of order k^{-1} are crucial when studying quantum order from disorder. These terms depend on the quantization procedure; this motivates the use of the Toeplitz framework in which those contributions can be readily computed. In Section A.1.3 we study several toy models in which the choice of Toeplitz quantization is potentially crucial in the treatment of quantum selection.

Quantum selection for Toeplitz operators

In a recent article [Del17], we developed mathematical tools in order to study quantum selection for general Toeplitz operators in the large k limit. We report that, in a general case (even if the set of minimal classical energy is irregular), quantum selection takes place for Toeplitz operators following a general criterion.

In order to apply our results to usual spin operators, as seen above, we need to consider Toeplitz operators with classical energy depending on k in the following way:

$$f = f_0 + k^{-1} f_1 + k^{-2} f_2 + \dots,$$

where each term f_j is a real function on the phase space. Indeed, the quantization of symbols which do not depend on k only yield a deformation of the usual spin operators. The Toeplitz operator $T_k(f)$ is well-defined by linearity.

Quantum states with energy less than $\min(f_0) + Ck^{-1}$ are known to localize on $Z = \{f_0 \text{ is minimal}\}$ as k grows. In a neighbourhood of any point P_0 of Z, the function f_0 can be approximated by its quadratic Taylor estimate $\min(f_0) + Q$, where Q is a semidefinite positive quadratic form which depends on P_0.

The selection criterion is then

$$\tilde{\mu} = \mu(Q) + f_1,$$

in following sense: if (u_k) denotes a sequence of ground states of $T_k(f)$, if a set V lies at positive distance from

$$\{x \in Z, \tilde{\mu}(x) = \min(\tilde{\mu})\},$$

then for every j one has, as $k \to +\infty$,

$$\int_V \|u_k(z)\|^2 \precsim k^{-j}.$$

The meaning of $\|u_k(z)\|^2$ depends on the underlying manifold (for instance, on $\mathbb{C}^d$ it corresponds to $|u_k(z)| \exp(-k|z|^2)$), but as our quantum states are defined on the whole phase space, localisation properties can be formulated in a more elementary way than in the space representation.

The quantum ground state localizes, in the large k limit, only on the part of Z where $\tilde{\mu}$ is minimal; at any positive distance from this set, the ground state decays faster than any negative power of k. In fact, if E_0 is the energy of the ground state, then any quantum eigenstate with energy less than $E_0 + \epsilon k^{-1}$ for any ϵ localizes where $\tilde{\mu}$ is minimal.[1]

In order to apply this result from a standard "operator-presented" quantum spin Hamiltonian in the large spin limit, one needs first to compute, not only the associated classical energy at the main order, but also the so-called "subprincipal symbol" which contains the next-order terms in the quantization procedure. For instance, starting with the operator S_z^2, the principal symbol is of course z^2, and from Table 1 one can compute that a more accurate representation is

$$z^2 + k^{-1}(5z^2 + 1).$$

1 If the minimal set Z is infinite, the number of eigenstates with energy less than $E_0 + \epsilon k^{-1}$ for any ϵ tends to $+\infty$ as $k \to \infty$.

This subprincipal part, added to the trace and to the sum of symplectic eigenvalues of the quadratic part of the energy, yields the function $\widetilde{\mu}$ which is the selection rule. In section A.1.3 we apply this method to several models.

The physical interpretation of $\widetilde{\mu}$ is the following: suppose that one wants to minimise the energy of a quantum state while constraining it to be localised at a precise point, where the classical energy has a local minimum. Then the energy of this minimal constrained state is naturally close to the classical energy, but is lifted up by quantum fluctuations. Indeed, quantum states have to spread out somewhat, and to reach parts of the phase space where the classical energy is not minimal. This energy lift is of the same order as the semiclassical parameter (here, k^{-1}). Then $\widetilde{\mu}$, at this point, is the k^{-1} contribution to this energy lift.

In the context of spin systems, the selection rule is determined by the classical frequencies of the spin waves, and by non-trivial additional terms which must be taken care of. For the particular case of HAF systems, if each spin has the same number of neighbors, then the additional terms are constant, but on other systems on which quantum selection is studied, they can play an important role.

Other semiclassical approaches on the sphere

As discussed above, the coherent state quantization scheme presented by Lieb [Lie73] is contained in the Toeplitz framework. Our symbols correspond to Lieb's lower symbol; the upper symbol is given by "covariant Toeplitz quantization" where one writes Toeplitz operators as kernel operators and follows the Wick order.

Both lower and upper symbols give different results than Weyl quantization for the ground state energy of operators with quadratic symbols (they respectively give a larger and a smaller energy). In an effort to recover Weyl quantization at order $\hbar$, an intermediate, "Wigner-Weyl" quantization scheme on the sphere was proposed [VG89]. It is equivalent to both Toeplitz and covariant Toeplitz quantization up to a change of symbols.

Other, less geometrical approaches are present in the literature. Unfortunately, without taking into account the global geometry of the sphere, these models give an incorrect description of the semiclassical limit. One of these approaches [SWH87] "maps" spin operators onto a problem on $L^2((0,+\infty))$. It is of course dubious to map a finite-dimensional problem onto an infinite-dimensional one. When using this approach, one should take care of the highly non-trivial boundary conditions on the mapped system, which in fact enforce it to be a finite-dimensional subspace of $L^2((0,+\infty))$, and which are, for instance, incompatible with the WKB treatment which was the goal of the cited article. Another attempt [CG88] consists in removing two antipodal points on the sphere, thus reducing $\mathbb{S}^2$ to $T^*\mathbb{S}^1$ with quantum Hilbert space $L^2(\mathbb{S}^1)$. Again, since the outcome space is infinite-dimensional, there is no way that such an equivalence could be rigorous.

A.1.3 Toy models

In order to understand quantum selection in the general case and in the particular case of spin systems, we first look at three simple toy models.

In the first toy model, which is the first historical example of quantum selection, thermal and quantum selection play the same role. In the second toy model, which has an irregular minimal set as does the HAF on the Kagome lattice, thermal selection is sharper than quantum selection: some classical configurations are equivalent from a quantum point of view (they share the same value of $\widetilde{\mu}$), but are discriminated by the Gibbs measure. Conversely, on the third toy model, there is no thermal selection, but quantum selection takes place.

Miniwells

The general study of quantum selection for the ground state of a Schrödinger operator was performed by Helffer and Sjöstrand [HS86a] who exposed a WKB construction for a quasimode associated to the lowest energy. Quantum selection occurs when the potential V is minimal on a degenerate set Z. If Z is a smooth manifold on which V vanishes at order 2, the criterion for quantum selection is the trace of the square root of the Hessian matrix of V at the minimal points; in this Weyl setting, it corresponds exactly to the sum of the classical frequencies for the linearized system. Even in this case it does not correspond to the criterion for thermal selection (which is the product of these frequencies).

The simplest example is the operator $P_\hbar = -\hbar^2\Delta + V$ acting on $L^2(\mathbb{R}^2)$, with $V(x,y) = y^2(1+x^2)$, vanishing at order two on the horizontal axis. It is already interesting to note that, though V itself is not a confining potential, P_h only has discrete spectrum because of the quantum selection.

Around every point $(x_0, 0)$ of the horizontal axis, the quadratic terms in the potential are $y^2(1+x_0^2)$. For this quadratic potential there is one non-zero classical frequency, $\sqrt{1+x_0^2}$. This frequency is minimal at $x_0 = 0$, which is called the "miniwell" for this potential. Hence, the ground state of this operator concentrates on the point $(0,0)$, in the previous sense (for the Husimi transform).

In this setting, the value $\widetilde{\mu}$ coincides with the effective potential given by the intuition of the adiabatic approximation [DS98]. At $(x_0, 0)$ one can approximate the behaviour of a low-energy state in the second variable as the ground state of the quadratic transverse operator $-\hbar^2\partial_y^2 + (1+x_0^2)y^2$; if $e_{x_0}(y)$ is the ground state of this operator, then the energy of a state of the form $e_x(y)f(x)$ is

$$\hbar\langle f, (-\hbar\partial_x^2 + \widetilde{\mu})f\rangle,$$

so that $\widetilde{\mu}$ acts as an effective potential (with new semiclassical parameter $\sqrt{\hbar}$).

Crossing points

With the Kagome lattice in mind, let us consider toy models where the minimal set of the classical energy is not a smooth manifold.

The first of this model is again a Schrödinger operator on $\mathbb{R}^2$, with potential $V(x,y) = x^2y^2$. The minimal set consists in the two axes, which meet at zero. On the horizontal branch $(x_0, 0)$, there is only one non-zero linear classical frequency, which is $|x_0|$. This frequency is minimal at zero (note that this frequency is not smooth at zero). The same applies for the vertical axis. Once again, the operator $P_\hbar = -\hbar^2\Delta + V$ only has discrete spectrum and the first eigenfunction localizes at the origin, which is also the point of thermal selection (since the local dimension of the zero modes is maximal at this point). Because of the non-regularity of the classical frequency at the crossing point, for a potential W close to V which is also minimal on the two axes, the quantum system will still select the crossing point.

In this setting, the Born-Oppenheimer approximation fails at the crossing point, so that there is no simpler effective model. However $\widetilde{\mu}$ still acts as an energy barrier, independently on the geometry.

A more general crossing is the Schrödinger operator on $\mathbb{R}^3$, with potential

$$V(x,y,z) = x^2y^2z^2.$$

The minimal set is the union of the three planes $\{x = 0\}, \{y = 0\}, \{z = 0\}$, and the local zero dimension is maximal at the origin. However, on the plane $\{x = 0\}$ the classical frequency is $|yz|$. All classical frequencies vanish identically on the three axes.

For this particular potential, there is a hierarchy of perturbations, and investigating the sub-sub-principal (order k^{-2}) terms will lead to concentration at the origin and discrete spectrum. However, if non-degenerate transverse modes are added, they correspond (in the adiabatic regime) to a perturbation of order k^{-1}, in front of which the k^{-2} confinement at the origin is negligible; in the general setting, even for small perturbations, the quantum selected point can be any point on the three axes. This illustrates the discrepancy between quantum and thermal selection and shows that for the Kagome lattice, the points of quantum selection might not necessarily be the planar configurations, though those configurations have the maximal number of zero modes.

Cancelling terms

We propose an example which serves to illustrate the effects of the different terms in the process by which quantum selection takes place.

Let us consider the following one-spin Hamiltonian:

$$H = S_z^2 + \Delta S_z S_x S_z.$$

The principal symbol of this operator is

$$h_0 = z^2(1 + \Delta x).$$

If $0 < \Delta < 1$, then h_0 is minimal on $\{z = 0\}$. It looks like h_0 is smaller near $(-1, 0, 0)$ than near any other point, so that, at first sight, quantum order from disorder seems to take place in this setting.

Let us look at the three terms appearing in quantum selection:

1. For any minimal point, the associated linear classical frequency is zero, since the linear classical approximation is that of a free massive particle in one-dimensional space.

2. The trace of the quadratic form near a minimal point is non-zero; this term has contribution
$$\mu = 1 + \Delta x$$

3. The next-order term in the expansion is
$$h_1 = 5z^2 - 1 + \Delta(9z^2 x - x)$$
In particular, on the set where h_0 is minimal, one has
$$h_1 = -1 - \Delta x.$$

The set selected by quantum order by disorder is the set where $h_1 + \mu$ is minimal, but the two terms cancel out. Hence, there is no quantum selection at this order of expansion.

It can readily be seen that, if the spin S is even, then $S_z|0\rangle = 0$, so that $H|0\rangle = 0$ and $|0\rangle$ is the ground state of H. As expected, the magnetization of $|0\rangle$ along the x axis is exactly zero. Hence, there is no quantum selection in the large spin limit for this model.

More involved theoretical examples where the classical degeneracy is not lifted at any order of S^{-1} include spin textures [DKM16]. In other situations, there could be no quantum selection at first order, but next-order terms could break the degeneracy. In practice, one expects additional terms (such as second nearest neighbours interactions) which will destroy exact degeneracies.

A.1.4 Examples

Kagome lattice

The quantum HAF on the Kagome lattice is the Toeplitz quantization of the classical energy
$$\sum_{i\sim j} \mathbf{e}_i \cdot \mathbf{e}_j.$$

Here $i \sim j$ means that the two sites i and j are linked by an edge. The Toeplitz quantization of the symbol above is
$$\frac{S^2}{(S+1)^2} \sum_{i\sim j} S_i \cdot S_j,$$

so that, up to a multiplicative factor, the quantization of the classical HAF is the quantum HAF. As we wish to study quantum selection, it is important that in this case $h_1 = 0$.

The low-temperature properties of the $S = \frac{1}{2}$ HAF on the Kagome lattice are still unknown. Various numerical Ansätze or exact diagonalizations [IPB15; IPB14; Iqb+13; ZE95; Wal+98; Lec+97; DMS12] predict a gapless spin liquid phase with polynomial decay of correlations. Recent experiments [Fu+15; Han+16] report the

existence of a very small gap, but this gap is presumed to be opened by an interaction of Dzyaloshinskii-Moriya [LNK18]. We note that, in the semiclassical limit, this interaction reduces the classical minimal set to $U(1)$ (with long-range order).

The behaviour of the $S = \frac{1}{2}$ case is presumably linked with the semiclassical picture, although for spin systems we are very far from a mathematical statement[2]. In the rest of this section we analyse the Kagome antiferromagnet, without farther-distance interactions, in the large spin limit.

If $\mathbf{e}_i = (x_i, y_i, z_i)$, since sites in the Kagome lattice are connected in triangles, up to a constant the classical energy reads

$$\sum_{\text{triangles}} \|\mathbf{e}_i + \mathbf{e}_j + \mathbf{e}_k\|^2.$$

The minimal classical set consists in configurations where, on each triangle of sites, spins form a great equilateral triangle on the sphere. This set has a highly non-trivial structure: the presence of loops of triangles makes it non-smooth. The classical minimal set for one hexagon of triangles already has a crossing point as one of the toy models, on which two smooth manifolds cross.

An interesting subset of classical minimal configurations consists in planar configurations, which form a discrete set. It is believed that quantum order by disorder selects these configurations, thus reducing the semiclassical study to a 3 colours Potts model on the Kagome lattice (with Hamiltonian unknown so far). Some of those planar configurations have been proven [Chu92] to be local minima for the function μ which is the criterion for quantum selection, but it is unknown whether these are the global minima for μ or not. The results in the $S = \frac{1}{2}$ case are compatible with this approach as there is an extensive number of coplanar states, the majority of which having no long-range order; this contrasts with the $SU(N)$ approach [Sac92] which would predict a unique, ordered, selected configuration.

Simple models for the Kagome lattice

An easy case which allows one to understand the large S behavior of the HAF on the Kagome lattice consists in a loop of four triangles. In this situation the classical minimal set is (once accounted for the global $SO(3)$ action) the union of three circles C_1, C_2, C_3, two of each crossing at exactly one point. The crossing points correspond to planar configurations. There is a symmetry exchanging C_2 and C_3. In Figure 10 we plot the value of μ along C_1 and along C_2, with parameter an angle which is 0 or π on the crossings; this confirms the general belief that μ is minimal on planar configurations.

The Husimi tree, proposed by Douçot and Simon [DS98], also serves as a toy model for the study of the Kagome lattice. It is depicted on Figure 9.

The advantage of this model is that the classical minimal set is much simpler than on the Kagome lattice. Indeed, on the Husimi tree, once the three vectors on a parent triangle are chosen along a great equilateral triangle on the sphere, there is one degree of freedom in the choice of the spins for each child triangle. Thus, the minimal set is a torus of dimension $\sharp(\text{triangles}) - 1$, parametrised by the angles between the equilateral triangles at neighbouring sites.

2 This contrasts with semiclassical treatment of the thermodynamic limit for bosons or fermions, which is now well understood.

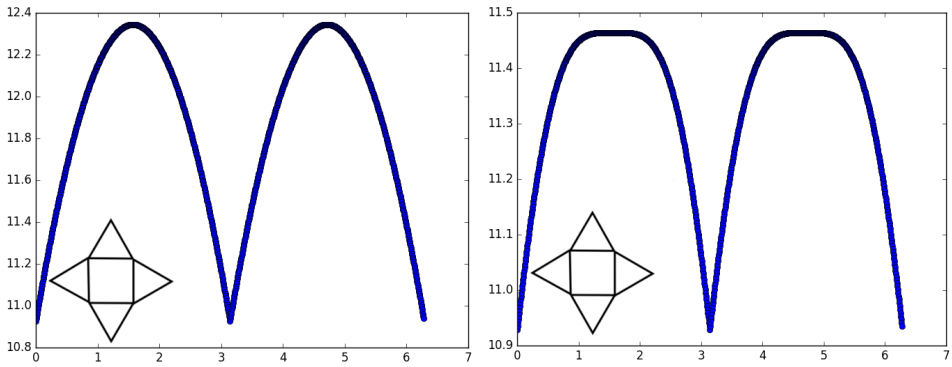

Figure 10: Numerical plot of μ for a loop of 4 triangles (insets), along C_1 (left) and C_2 (right).

Douçot and Simon [DS98] reported that the classical frequencies are not constant on the classical minimal set: in particular, in this situation there is quantum selection (the selected points are presumed to be coplanar configurations except for the spins at the leaves which are free), but there is no thermal selection since there are equivalent for a class of phase space transformations which preserve the volume.

Anisotropic XXZ chain

Let us take up from an example proposed by Douçot and Simon [DS98] and define the following Hamiltonian acting on a closed chain of N spins:

$$H = J \sum_i S_i \cdot S_{i+1} + \sum_i S_i^z (S_{i+1}^z - S_i^z).$$

The principal term in the classical energy is

$$h_0 = J \sum_i \mathbf{e}_i \cdot \mathbf{e}_{i+1} + \sum_i z_i (z_i - z_{i+1}).$$

The next-order contribution is

$$h_1 = 2J \sum_i \mathbf{e}_i \cdot \mathbf{e}_{i+1} + \sum_i (-2 z_i z_{i+1} + 5 z_i^2 - 1).$$

If $J < 0$, the minimum of h_0 is reached on ferromagnetic configurations $\{\mathbf{e}_i = \mathbf{e}\}$, indexed by $\mathbb{S}^2$.

Near any of these minimal configurations, the linear spin wave theory is the same, up to a factor $-J + 1 - z^2$ in the potential. Hence, μ is minimal as $z = 0$.

On ferromagnetic ordered configurations, one has

$$h_1 = JN + 3Nz^2.$$

Again h_1 is smaller when $z = 0$. The sum $\mu + h_1$, which is the criterion for quantum selection, is minimal as $z = 0$, hence the ground state is located on this set.

A.1.5 Conclusion

Quantum versus thermal selection

In this appendix, we reported evidence that quantum order by disorder does not have the same rules as thermal order by disorder. In experimental settings of low-temperature quantum systems, there is competition between quantum and thermal selection. We present an analysis of orders of magnitude.

For the Herbertsmithite $ZnCu_3(OH)_6Cl_2$, which is an experimental realization of the Kagome lattice, the interaction strength J is [Wul+10] of order

$$\frac{J}{k_B} \simeq 200K.$$

In experimental realizations, the spin S cannot be very large so that the order of magnitude of the contribution $\mu + h_1$ is also of order $100K \times k_B$. This means that, below these temperatures, quantum selection predominates over thermal selection, since the magnitude of the quantum fluctuations is much greater. Thus, one cannot hope that the simple fact that planar configurations are selected by thermal fluctuations

In our recent article [Del17] we also computed the relative contributions at low temperature on systems for which the quantum selection criterion $\mu + h_1$ is minimal at two points, one of which is a regular "miniwell" point, the other a crossing point. In this situation, if the temperature is such that thermal effects are of the same order as quantum effects, then the crossing point will be selected (the quantum fluctuations do not see the difference between the two points, and the thermal fluctuations select the one with maximal local zero dimension). However, at lower temperatures, the regular point will be selected. The interpretation is that $\mu + h_1$ acts as an effective Hamiltonian, which is smooth on the miniwell, but which is typically non-regular at the crossing point (see Figure 10). This confinement leads to an increased quantum energy (this shift is of order $S^{-4/3}$). Hence, there are more low-energy quantum states near the miniwell than near the crossing point. This is a theoretical instance of a phase transition, which is of course very peculiar (since $\mu + h_1$ reaches the same value at two very different points).

Selection on the Kagome lattice

The actual computation of μ on examples, even as simple as a chain of triangles, requires the full diagonalization of a matrix whose size grows with the number of spins, at each minimal point. Variational approaches allow one to show that special (usually planar) configurations are critical points for μ (the first derivative of μ vanishes at these points), but to show that these configurations are global minima requires additional techniques.

As illustrated in Section A.1.3, the local geometry of the minimal classical set plays a very important role. Points near which the classical minimal set is a smooth manifold are now quite well understood from a mathematical point of view. On a point where exactly two manifolds cross, there is a chance that quantum order by disorder selects the crossing, especially in symmetrical situations for which the function μ reaches a local minimum at the crossing. Conversely, if three or more manifolds cross at a point, with model the boundary of a hypercube, then the crossing point has no reason to be selected by the quantum system.

We believe that, near planar configurations on the Kagome lattice, the local structure of the classical minimal set is a direct product of structures with two manifolds crossing [3], with quartic non-degenerate part (that is, they follow the model case above). Indeed, the quadratic and quartic terms in the energy, near a planar configuration, do not depend on the particular planar configuration, so that as soon as for one configuration one has a product of structures as above, it is the case for all configurations.

On systems where the classical minimal set is non smooth, such as the Kagome lattice, the parametrisation of this set is already a challenge. Numerical techniques which do not involve knowledge of the minimal set should be of help in tackling this problem.

Tunnelling

To conclude with, we address the issue of exponential precision in estimates related to Toeplitz operators. This problem is relevant in the context of tunnelling: it is generally hoped that, in the presence of symmetries, the ground state will tunnel between various configurations, and the spectral gap (or the inverse time needed for a quantum state to go from one configuration to another) will be of order $\exp(-cS)$ in the large spin limit, where c is a "tunnelling rate", related to some classical action.

Various attempts [GK92; Aws+92; GK90; CG88; AL91; And56; DH93] have been made to study this phenomenon in the setting of spin systems, mainly by removing two antipodal points on the phase space (the sphere), thus formally transforming the phase space into $\mathbb{R}\times\mathbb{S}^1$ in which usual (Weyl) quantization takes place with quantum state space $L^2(\mathbb{S}^1)$. However, it is doubtful that these attempts yield the correct tunnelling rate. First, this manipulation changes the quantization procedure, and it is unclear whether there is a way to perform the computations which is consistent with the initial problem up to an error of order S^{-1}, let alone an exponentially small error. Second, rates of decay of order $\exp(-c\hbar^{-1})$ are notoriously delicate even in the simplest geometrical setting of Weyl quantization on $\mathbb{R}^{2n}$, as detailed by Martinez [Mar02]. The basic difficulty is that one needs to extend data in complex space, which can be done only if the classical energy is real analytic, and only to a small distance from the real space. This puts a limit on the actual tunnelling rate. Lower bounds (Agmon estimates) on the tunnelling rate for Toeplitz operators were recently obtained by the author [Del18c].

3 An example of such a direct product is the Schrodinger opertor on $\mathbb{R}^4$ with potential $x^2y^2 + z^2t^2$. At the point 0 four manifolds cross as a cartesian square of the crossing of two manifolds at a point, not as the corner of a hypercube.

A.1.6 Computation of Toeplitz operators on the sphere

For the particular case of the sphere, one can build Toeplitz operators as on $\mathbb{C}^d$ via the stereographic projection, which maps the sphere minus the north pole onto $\mathbb{C}$ in a holomorphic way. This allows us to treat and compute Toeplitz operators without having to deal with the underlying complex geometrical framework.

Under the stereographic projection, quantum states on the sphere are holomorphic functions on $\mathbb{C}$ which have finite norm under the following Hermitian structure:

$$\langle f|g\rangle_{H_k} = \frac{k+1}{2\pi}\int_{\mathbb{C}} \frac{\overline{f}(w)g(w)}{(1+|w|^2)^{k+2}}dw.$$

To study this Hermitian structure, it is useful to first compute the following family of integrals, for $k \in \mathbb{N}$ and $0 \leq j \leq k$:

$$A_{j,k} = \int_0^{+\infty} \frac{u^j}{(1+u)^{k+2}}du.$$

The coefficients $A_{j,k}$ satisfy

$$A_{0,k} = \left[\frac{1}{(k+1)(1+u)^{k+1}}\right]_0^{+\infty} = \frac{1}{k+1},$$
$$A_{j,k} + A_{j+1,k} = A_{j,k-1}.$$

The explicit solution is given by

$$A_{j,k} = \frac{1}{k+1}\binom{k}{j}^{-1}.$$

The space H_k consists of polynomials of degree less than k. The monomials are orthogonal but not normalized; their norms are exactly given by

$$\begin{aligned}
\langle w^j|w^j\rangle_{H^k} &= \frac{k+1}{2\pi}\int_{\mathbb{C}} \frac{|w|^{2j}}{(1+|w|^2)^{k+2}}dw \\
&= \frac{k+1}{2\pi}\iint_{[0,+\infty)\times\mathbb{S}^1} \frac{r^{2j}}{(1+r^2)^{k+2}}rdrd\theta \\
&= (k+1)\int_0^{+\infty} \frac{u^j}{(1+u)^{k+2}}du \\
&= (k+1)A_{j,k} = \binom{k}{j}^{-1}.
\end{aligned}$$

Hence, a Hilbert basis of H_k is given by

$$e_{j,k} : w \mapsto \sqrt{\binom{k}{j}}w^j$$

The matrices of Toeplitz operators in this basis can be computed by a polar change of coordinates, yielding Table 1. In the rest of this appendix we compute the matrix elements of $T_k(s_z)$ and $T_k(s_x)$ where s_z and s_x are respectively the height and abscissa on the sphere.

The height function z on the sphere becomes, in the stereographic projection, the map

$$s_z : w \mapsto \frac{|w|^2 - 1}{|w|^2 + 1}.$$

Matrix elements of $T_k(s_z)$ are then given by

$$\begin{aligned}\langle e_{j,k}|T_k(s_z)|e_{j',k}\rangle_{H_k} \\ &= \frac{(k+1)\sqrt{\binom{k}{j}\binom{k}{j'}}}{2\pi}\int_{\mathbb{C}} \frac{\overline{w}^j(1-|w|^2)w^{j'}}{(1+|w|^2)^{k+3}}\,dw.\end{aligned}$$

In polar coordinates $w = re^{i\theta}$, one has

$$\frac{\overline{w}^j(|w|^2-1)w^{j'}}{(1+|w|^2)^{k+3}} = \frac{r^{j+j'}(1-r^2)}{(1+r^2)^{k+3}}e^{i(j-j')\theta}.$$

In particular, if $j \neq j'$ then $\int_0^{2\pi} e^{i(j-j')\theta}d\theta = 0$ so that $\langle e_{j,k}|T_k(s_z)|e_{j',k}\rangle_{H_k} = 0$. If $j = j'$, we are left with

$$\begin{aligned}\langle e_{j,k}|T_k(s_z)|e_{j,k}\rangle_{H_k} &= A_{j,k}^{-1}\int_0^{+\infty}\frac{u^j(u-1)}{(1+u)^{k+3}} \\ &= A_{j,k}^{-1}(A_{j+1,k+1} - A_{j,k+1}) \\ &= \frac{2j-k}{k+2}.\end{aligned}$$

Hence, in this basis, the operator $T_k(z)$ is $\dfrac{k}{k+2}$ times a diagonal operator with equidistributed diagonal values from -1 to 1; that is, the spin operator S_z with $2S = k$. We then see that the states $e_{j,k}$ corresponds to spin states $|S, m\rangle$ with $m = j - S$.

The abscissa s_x is mapped, via the stereographic projection, into the map

$$s_x : re^{i\theta} = w \mapsto \frac{2Re(w)}{1+|w|^2} = \frac{re^{i\theta} + re^{-i\theta}}{1+r^2}.$$

The matrix of $T_k(x)$ in the basis $(e_{j,k})_{0\leq j\leq k}$ is zero except on the over- and under-diagonal. The non-zero matrix elements are

$$\begin{aligned}\langle e_{j,k}|T_k(x)|e_{j+1,k}\rangle_{H_k} &= (A_{j,k}A_{j+1,k})^{-\frac{1}{2}}A_{j+1,k+1} \\ &= \frac{\sqrt{(k-j)(j+1)}}{k+2}.\end{aligned}$$

In this basis the matrix of the operator $T_k(x)$ is $\frac{k}{k+2}S_x$.

By this method, the Toeplitz quantization of any polynomial in the coordinates can be computed; this yields Table 1.

Spin	Mean 2nd-neighbour correlation
1/2	0.19
1	-0.22
3/2	0.39
2	-0.17
5/2	0.60
3	-0.096
7/2	0.72
4	0.76
9/2	0.78
5	0.81

Figure 11: Mean second-neighbour correlations for the ground state on four triangles. A value close to 1 indicates ordering along the ABAB configuration; a value close to $\frac{1}{4}$ denotes ordering along one of the ABCB configurations.

A.2 The Melin value for frustrated antiferromagnetic models

In this section we describe numerical attempts to investigate quantum selection on frustrated antiferromagnetic models on graph made of triangles.

A.2.1 Loop of four triangles

Let us complete the small discussion in subsection A.1.4.2 about the case of four triangles.

Along the circles C_1 and C_2, one can compute explicitely, in the base given by Figure 8, the Hessian matrix of H. This computation yields Figure 10.

There are two types of three-colourings of a loop of four triangles, up to a rotation of the graph and a permutation of colours. These types are determined by the colours of the central square. The first type is ABAB, and the second type is ABCB. In Table 11, it appears that the exact ground state, in the large spin limit, localises only on ABAB configurations, which form a copy of SO(3).

The particular ordering in this example advocates for an ordered ground state on boxes of finite size of the Kagome lattice, in the semiclassical limit.

A.2.2 General triangle graphs

In the particular case of a loop of four triangles, the classical minimal set can be exactly determined. Even in this setting, however, closed formulas for the Melin value along the classical minimal set are not known. In the more general setting of a graph made of triangles, a numerical treatment offers heuristic insight towards the determination of the set of minimal Melin value.

In this subsection we report numerical evidence that, for any graph made of triangles, except for an $\mathbb{S}^1$ degeneracy on triangle leaves, the set of minimal Melin value consists in all coplanar configurations.

To this end, we wrote a code which computes the antiferromagnetic symbol on a product of spheres as well as its Hessian, in local coordinates given by the stereographic projection. In particular, this code allows us to compute, given any configuration numerically close to the set of minimal energy, the associated Melin value. We then performed constrained optimisation procedures, in order to minimise the Melin value along the classical minimal set. Unfortunately the numerical stability of this procedure is hindered by the fact that the Melin value is not smooth when the set of classical minimal energy is not, and there are numerous critical points which are not minima, but on all tested graphs, the stable configurations reached with minimal Melin value are coplanar. Runs were made on chains of triangles of length up to 6, on one hexagon of triangles and on two hexagons of triangles, sharing two triangles. To our knowledge, such numerical investigations had not been performed before.

BIBLIOGRAPHY

[Agm14] Shmuel Agmon. *Lectures on Exponential Decay of Solutions of Second-Order Elliptic Equations: Bounds on Eigenfunctions of N-Body Schrödinger Operations.* (MN-29). Princeton University Press, 2014.

[And56] Philip W. Anderson. "Ordering and Antiferromagnetism in Ferrites." In: *Physical Review* 102.4 (May 1956), pp. 1008–1013.

[And73] Philip W. Anderson. "Resonating Valence Bonds: A New Kind of Insulator?" In: *Materials Research Bulletin* 8.2 (Feb. 1973), pp. 153–160.

[AL91] Assa Auerbach and Brond E. Larson. "Small-Polaron Theory of Doped Antiferromagnets." In: *Physical review letters* 66.17 (1991), p. 2262.

[Aws+92] David D. Awschalom, John F. Smyth, Geoffroy Grinstein, David P. DiVincenzo, and Daniel Loss. "Macroscopic Quantum Tunneling in Magnetic Proteins." In: *Physical review letters* 68.20 (1992), p. 3092.

[BB89] Radha Balakrishnan and Alan R. Bishop. "Nonlinear Dynamics of a Quantum Ferromagnetic Chain: Spin-Coherent-State Approach." In: *Physical Review B* 40.13 (1989), p. 9194.

[Bar61] Valentine Bargmann. "On a Hilbert Space of Analytic Functions and an Associated Integral Transform Part I." In: *Communications on pure and applied mathematics* 14.3 (1961), pp. 187–214.

[Ber75] Feliks A. Berezin. "General Concept of Quantization." In: *Communications in Mathematical Physics* 40.2 (1975), pp. 153–174.

[BK52] Theodore H. Berlin and Mark Kac. "The Spherical Model of a Ferromagnet." In: *Physical Review* 86.6 (1952), p. 821.

[Ber08] Robert Berman. "Determinantal Point Processes and Fermions on Complex Manifolds: Bulk Universality." In: *Algebraic and Analytic Microlocal Analysis* (to appear) (2008).

[Ber12] Robert Berman. "Sharp Asymptotics for Toeplitz Determinants and Convergence towards the Gaussian Free Field on Riemann Surfaces." In: *International Mathematics Research Notices* 2012.22 (2012), pp. 5031–5062.

[BBS08] Robert Berman, Bo Berndtsson, and Johannes Sjöstrand. "A Direct Approach to Bergman Kernel Asymptotics for Positive Line Bundles." In: *Arkiv för Matematik* 46.2 (2008), pp. 197–217.

[BB08] Robert Berman and Sebastien Boucksom. "Equidistribution of Fekete Points on Complex Manifolds." In: *arXiv* 0807.0035 (2008).

[BBN11] Robert Berman, Sébastien Boucksom, and David Witt Nyström. "Fekete Points and Convergence towards Equilibrium Measures on Complex Manifolds." In: *Acta Mathematica* 207.1 (2011), pp. 1–27.

[Blo+03] Anthony Bloch, François Golse, Thierry Paul, and Alejandro Uribe. "Dispersionless Toda and Toeplitz Operators." In: *Duke Mathematical Journal* 117.1 (2003), pp. 157–196.

[BHR16] Virginie Bonnaillie-Noël, F. Hérau, and N. Raymond. "Magnetic WKB Constructions." In: *Archive for Rational Mechanics and Analysis* 221.2 (2016), pp. 817–891.

[BU96] David Borthwick and Alejandro Uribe. "Almost Complex Structures and Geometric Quantization." In: *arXiv* dg-ga/9608006 (1996).

[BU03] David Borthwick and Alejandro Uribe. "On the Pseudospectra of Berezin-Toeplitz Operators." In: *Methods and Applications of Analysis* 10.1 (Mar. 2003), pp. 031–066.

[Bou74] Louis Boutet de Monvel. "Intégration des équations de Cauchy-Riemann induites formelles." In: *Séminaire Équations aux dérivées partielles (dit "Goulaouic-Schwartz")* (1974), pp. 1–13.

[BG81] Louis Boutet de Monvel and Victor Guillemin. *The Spectral Theory of Toeplitz Operators*. Annals of Mathematics Studies 99. Princeton University Press, 1981.

[BK67] Louis Boutet de Monvel and Paul Krée. "Pseudo-Differential Operators and Gevrey Classes." In: *Annales de l'Institut Fourier* 17.1 (1967), pp. 295–323.

[BS75] Louis Boutet de Monvel and Johannes Sjöstrand. "Sur la singularité des noyaux de Bergman et de Szegö." In: *Journées équations aux dérivées partielles* 34-35 (1975), pp. 123–164.

[Bru91] Raymond Brummelhuis. "Exponential Decay in the Semi–Classical Limit for Eigenfunctions of Schrödinger Operators with Magnetic Fields and Potentials Which Degenerate at Infinity." In: *Communications in partial differential equations* 16.8-9 (1991), pp. 1489–1502.

[Cat99] David Catlin. "The Bergman Kernel and a Theorem of Tian." In: *Analysis and Geometry in Several Complex Variables*. Ed. by Gen Komatsu and Masatake Kuranishi. Trends in Mathematics. Birkhäuser Boston, 1999, pp. 1–23.

[Cha00] Laurent Charles. "Aspects Semi-Classiques de La Quantification Géométrique." PhD thesis. Université Paris 9, 2000.

[Cha03] Laurent Charles. "Berezin-Toeplitz Operators, a Semi-Classical Approach." In: *Communications in Mathematical Physics* 239.1-2 (Aug. 2003), pp. 1–28.

[Cha07] Laurent Charles. "Semi-Classical Properties of Geometric Quantization with Metaplectic Correction." In: *Communications in mathematical physics* 270.2 (2007), pp. 445–480.

[Cha16] Laurent Charles. "Quantization of Compact Symplectic Manifolds." In: *The Journal of Geometric Analysis* 26.4 (2016), pp. 2664–2710.

[CP15] Laurent Charles and Leonid Polterovich. "Sharp Correspondence Principle and Quantum Measurements." In: *arXiv* 1510.02450 (2015).

[Chr03] Michael Christ. "Slow Off-Diagonal Decay for Szegö Kernels." In: *Harmonic Analysis at Mount Holyoke: Proceedings of an AMS-IMS-SIAM Joint Summer Research Conference on Harmonic Analysis, June 25-July 5, 2001, Mount Holyoke College, South Hadley, MA*. Vol. 320. American Mathematical Soc., 2003, p. 77.

[Chr13] Michael Christ. "Upper Bounds for Bergman Kernels Associated to Positive Line Bundles with Smooth Hermitian Metrics." In: *arXiv* 1308.0062 [math] (July 2013).

[Chu92] Andrey Chubukov. "Order from Disorder in a Kagome Antiferromagnet." In: *Physical review letters* 69.5 (Aug. 1992), pp. 832–835.

[CG88] Eugene M. Chudnovsky and Leon Gunther. "Quantum Tunneling of Magnetization in Small Ferromagnetic Particles." In: *Physical review letters* 60.8 (1988), p. 661.

[CS90] Joseph G. Conlon and Jan Philip Solovej. "On Asymptotic Limits for the Quantum Heisenberg Model." In: *Journal of Physics A: Mathematical and General* 23.14 (1990), p. 3199.

[CG12] Michele Correggi and Alessandro Giuliani. "The Free Energy of the Quantum Heisenberg Ferromagnet at Large Spin." In: *Journal of Statistical Physics* 149.2 (2012), pp. 234–245.

[CGS14] Michele Correggi, Alessandro Giuliani, and Robert Seiringer. "Validity of Spin-Wave Theory for the Quantum Heisenberg Model." In: *Europhysics Letters* 108.2 (2014), p. 20003.

[CGS15] Michele Correggi, Alessandro Giuliani, and Robert Seiringer. "Validity of the Spin-Wave Approximation for the Free Energy of the Heisenberg Ferromagnet." In: *Communications in Mathematical Physics* 339.1 (2015), pp. 279–307.

[CGS16] Michele Correggi, Alessandro Giuliani, and Robert Seiringer. "Low-Temperature Spin-Wave Approximation for the Heisenberg Ferromagnet." In: *Proceedings of the ICMP* (2016).

[Del16] Alix Deleporte. "Low-Energy Spectrum of Toeplitz Operators: The Case of Wells." In: *Journal of Spectral Theory (accepted)* (2016).

[Del17] Alix Deleporte. "Low-Energy Spectrum of Toeplitz Operators with a Miniwell." In: *arXiv* 1610.05902 (2017).

[Del18a] Alix Deleporte. "Quantum Selection for Spin Systems." In: *arXiv* 1808.00718 (2018).

[Del18b] Alix Deleporte. "The Bergman Kernel in Constant Curvature." In: *arXiv* 1812.06648 (2018).

[Del18c] Alix Deleporte. "Toeplitz Operators with Analytic Symbols." In: *arXiv* 1812.07202 (2018).

[Del19] Alix Deleporte. "WKB Eigenmode Construction for Analytic Toeplitz Operators." In: *arXiv* 1901.07215 (2019).

[DH93] Jan von Delft and Christopher L. Henley. "Spin Tunneling in the Kagomé Antiferromagnet." In: *Physical Review B* 48.2 (1993), p. 965.

[Dem91] Jean-Pierre Demailly. "Holomorphic Morse Inequalities." In: *Several complex variables and complex geometry, Part* 2 (1991), pp. 93–114.

[DMS12] Stefan Depenbrock, Ian P. McCulloch, and Ulrich Schollwöck. "Nature of the Spin-Liquid Ground State of the S=1/2 Heisenberg Model on the Kagome Lattice." In: *Physical review letters* 109.6 (2012), p. 067201.

[DMN15] Tien-Cuong Dinh, Xiaonan Ma, and Viet-Anh Nguyen. "Equidistribution Speed for Fekete Points Associated with an Ample Line Bundle." In: *Annales de l'ÉNS (to appear)* (2015).

[DKM16] Benoît Douçot, Dmitry L. Kovrizhin, and Roderich Moessner. "Large and Exact Quantum Degeneracy in a Skyrmion Magnet." In: *Physical Review B* 93.9 (2016), p. 094426.

[DS98] Benoît Douçot and Patrice Simon. "A Semiclassical Analysis of Order from Disorder." In: *Journal of Physics A: Mathematical and General* 31.28 (1998), p. 5855.

[Fau06] Frédéric Faure. "Prequantum Chaos: Resonances of the Prequantum Cat Map." In: *arXiv* nlin/0606063 (June 2006).

[FT17] Frédéric Faure and Masato Tsujii. "Fractal Weyl Law for the Ruelle Spectrum of Anosov Flows." In: *arXiv* 1706.09307 [math] (June 2017).

[FKZ12] Frank Ferrari, Semyon Klevtsov, and Steve Zelditch. "Gravitational Actions in Two Dimensions and the Mabuchi Functional." In: *Nuclear Physics B* 859.3 (2012), pp. 341–369.

[FL77] Jürg Fröhlich and Elliott H. Lieb. "Existence of Phase Transitions for Anisotropic Heisenberg Models." In: *Physical review letters* 38.8 (1977), p. 440.

[FL78] Jürg Fröhlich and Elliott H. Lieb. "Phase Transitions in Anisotropic Lattice Spin Systems." In: *Statistical Mechanics*. Springer, 1978, pp. 127–161.

[Fu+15] Mingxuan Fu, Takashi Imai, Tian-Heng Han, and Young S. Lee. "Evidence for a Gapped Spin-Liquid Ground State in a Kagome Heisenberg Antiferromagnet." In: *Science* 350.6261 (Nov. 2015), pp. 655–658.

[GK90] Anupam Garg and Gwang-Hee Kim. "Macroscopic Quantum Tunneling of the Total Magnetization in Small Ferromagnetic Grains." In: *Journal of Applied Physics* 67.9 (1990), pp. 5669–5671.

[GK92] Anupam Garg and Gwang-Hee Kim. "Macroscopic Magnetization Tunneling and Coherence: Calculation of Tunneling-Rate Prefactors." In: *Physical Review B* 45.22 (June 1992), pp. 12921–12929.

[Gou25] Samuel Goudsmit. "Über Die Komplexstruktur Der Spektren." In: *Zeitschrift für Physik* 32 (1925).

[GS91] Victor Guillemin and Matthew Stenzel. "Grauert Tubes and the Homogeneous Monge-Ampere Equation." In: *Journal of Differential Geometry* 34.2 (1991), pp. 561–570.

[GU88] Victor Guillemin and Alejandro Uribe. "The Laplace Operator on the Nth Tensor Power of a Line Bundle: Eigenvalues Which Are Uniformly Bounded in n." In: *Asymptotic Analysis* 1.2 (Jan. 1988), pp. 105–113.

[Han+16] Tian-Heng Han, Michael R. Norman, Jiajia Wen, Jose A. Rodriguez-Rivera, Joel S. Helton, Collin Broholm, and Young S. Lee. "Correlated Impurities and Intrinsic Spin-Liquid Physics in the Kagome Material Herbertsmithite." In: *Physical Review B* 94.6 (2016), p. 060409.

[HKB92] A. Brooks Harris, Catherine Kallin, and A. John Berlinsky. "Possible Néel Orderings of the Kagomé Antiferromagnet." In: *Physical Review B* 45.6 (Feb. 1992), pp. 2899–2919.

[Har+97] Mark J. Harris, Steve T. Bramwell, Des F. McMorrow, Thomas H. Zeiske, and K. W. Godfrey. "Geometrical Frustration in the Ferromagnetic Pyrochlore Ho2Ti2O7." In: *Physical review letters* 79.13 (1997), p. 2554.

[Haw53] N. S. Hawley. "Constant Holomorphic Curvature." In: *Canadian Journal of Mathematics* 5 (1953), pp. 53–56.

[Hel88] Bernard Helffer. "Semi-Classical Analysis for the Schrödinger Operator and Applications." In: *Lecture notes in mathematics* 1336 (1988).

[HK09] Bernard Helffer and Yuri A. Kordyukov. "Semiclassical Analysis of Schrödinger Operators with Magnetic Wells." In: *Contemporary Mathematics* 500 (2009), p. 105.

[HM96] Bernard Helffer and Abderemane Mohamed. "Semiclassical Analysis for the Ground State Energy of a Schrödinger Operator with Magnetic Wells." In: *Journal of Functional Analysis* 138.1 (1996), pp. 40–81.

[HM01] Bernard Helffer and Abderemane Morame. "Magnetic Bottles in Connection with Superconductivity." In: *Journal of Functional Analysis* 185.2 (2001), pp. 604–680.

[HN85] Bernard Helffer and Jean Nourrigat. "Hypoellipticité Maximale Pour Des Opérateurs Polynômes de Champs de Vecteurs." In: *Progress in Math* 58 (1985).

[HN92] Bernard Helffer and Jean Nourrigat. "Décroissance à l'infini Des Fonctions Propres de l'opérateur de Schrödinger Avec Champ Électromagnétique Polynomial." In: *Journal d'Analyse Mathématique* 58.1 (1992), pp. 263–275.

[HS84] Bernard Helffer and Johannes Sjöstrand. "Multiple Wells in the Semi-Classical Limit I." In: *Communications in Partial Differential Equations* 9.4 (1984), pp. 337–408.

[HS86a] Bernard Helffer and Johannes Sjöstrand. "Puits Multiples En Limite Semi-Classique V : Étude Des Minipuits." In: *Current topics in partial differential equations* (1986), pp. 133–186.

[HS86b] Bernard Helffer and Johannes Sjöstrand. "Résonances En Limite Semi-Classique." In: *Mémoires de la Société Mathématique de France* 24 (1986), pp. 1–228.

[HS92] Bernard Helffer and Johannes Sjöstrand. "Semiclassical Expansions of the Thermodynamic Limit for a Schrödinger Equation. I: The One Well Case." In: *Astérisque*. Société mathématique de France, 1992, pp. 135–181.

[Hel+16] Bernard Helffer, Yuri Kordyukov, Nicolas Raymond, and San Vũ Ngọc. "Magnetic Wells in Dimension Three." In: *Analysis & PDE* 9.7 (Nov. 2016), pp. 1575–1608.

[HBW84] J. Leo van Hemmen, Antonio A. S. Brito, and Walter F. Wreszinski. "Spin Waves in Quantum Ferromagnets." In: *Journal of statistical physics* 37.1-2 (1984), pp. 187–213.

[HLX17] Hamid Hezari, Zhiqin Lu, and Hang Xu. "Off-Diagonal Asymptotic Properties of Bergman Kernels Associated to Analytic Kähler Potentials." In: *arXiv* 1705.09281 (2017).

[HX18] Hamid Hezari and Hang Xu. "Quantitative Upper Bounds for Bergman Kernels Associated to Smooth Kähler Potentials." In: *arXiv* 1807.00204 [math] (June 2018).

[HS04] Michael Hitrik and Johannes Sjöstrand. "Non-Selfadjoint Perturbations of Selfadjoint Operators in 2 Dimensions I." In: *Annales Henri Poincaré* 5.1 (Feb. 2004), pp. 1–73.

[HS08] Michael Hitrik and Johannes Sjöstrand. "Rational Invariant Tori, Phase Space Tunneling, and Spectra for Non-Selfadjoint Operators in Dimension 2." In: *Annales Scientifiques de l'ÉNS.* Vol. 41. 2008, pp. 513–573.

[Hör65] Lars Hörmander. "L^2 Estimates and Existence Theorems for the $\overline{\partial}$ Operator." In: *Acta Mathematica* 113.1 (July 1965), pp. 89–152.

[Hör71] Lars Hörmander. "Fourier Integral Operators. I." In: *Acta mathematica* 127.1 (1971), pp. 79–183.

[Hör85] Lars Hörmander. *The Analysis of Linear Partial Differential Operators IV.* Classics in Mathematics. Springer, 1985.

[Hör03] Lars Hörmander. *The Analysis of Linear Partial Differential Operators. I.* Springer, Berlin, 2003.

[Hou+06] J. Ben Hough, Manjunath Krishnapur, Yuval Peres, and Bálint Virág. "Determinantal Processes and Independence." In: *Probability surveys* 3 (2006), pp. 206–229.

[Hus40] Kôdi Husimi. "Some Formal Properties of the Density Matrix." In: *Proceedings of the Physico-Mathematical Society of Japan. 3rd Series* 22.4 (1940), pp. 264–314.

[IPB14] Yasir Iqbal, Didier Poilblanc, and Federico Becca. "Vanishing Spin Gap in a Competing Spin-Liquid Phase in the Kagome Heisenberg Antiferromagnet." In: *Physical Review B* 89.2 (2014), p. 020407.

[IPB15] Yasir Iqbal, Didier Poilblanc, and Federico Becca. "Spin-1 2 Heisenberg J 1- J 2 Antiferromagnet on the Kagome Lattice." In: *Physical Review B* 91.2 (2015), p. 020402.

[Iqb+13] Yasir Iqbal, Federico Becca, Sandro Sorella, and Didier Poilblanc. "Gapless Spin-Liquid Phase in the Kagome Spin-1 2 Heisenberg Antiferromagnet." In: *Physical Review B* 87.6 (2013), p. 060405.

[Kle14] Semyon Klevtsov. "Random Normal Matrices, Bergman Kernel and Projective Embeddings." In: *Journal of High Energy Physics* 2014.1 (2014), p. 133.

[Koh63] Joseph J. Kohn. "Harmonic Integrals on Strongly Pseudo-Convex Manifolds: I." In: *Annals of mathematics* (1963), pp. 112–148.

[Koh64] Joseph J. Kohn. "Harmonic Integrals on Strongly Pseudo-Convex Manifolds: II." In: *Annals of mathematics* (1964), pp. 450–472.

[KR65] Joseph J. Kohn and Hugo Rossi. "On the Extension of Holomorphic Functions from the Boundary of a Complex Manifold." In: *Annals of Mathematics* (1965), pp. 451–472.

[Kor17] Yuri A. Kordyukov. "On Asymptotic Expansions of Generalized Bergman Kernels on Symplectic Manifolds." In: *arXiv* 1703.04107 [math-ph] (Mar. 2017).

[Kor18] Yuri A. Kordyukov. "Semiclassical Spectral Analysis of Toeplitz Operators on Symplectic Manifolds: The Case of Discrete Wells." In: *arXiv* 1809.06799 [math] (Sept. 2018).

[Kos70] Bertram Kostant. "Quantization and Unitary Representations." In: *Lectures in Modern Analysis and Applications III.* Springer, 1970, pp. 87–208.

[Lag+10] Jorge Lago, Ivica Živković, Boris Z. Malkin, J. Rodriguez Fernandez, Paolo Ghigna, P. Dalmas de Réotier, A. Yaouanc, and T. Rojo. "CdEr2Se4: A New Erbium Spin Ice System in a Spinel Structure." In: *Physical review letters* 104.24 (2010), p. 247203.

[LF14a] Yohann Le Floch. "Singular Bohr–Sommerfeld Conditions for 1D Toeplitz Operators: Elliptic Case." In: *Communications in Partial Differential Equations* 39.2 (2014), pp. 213–243.

[LF14b] Yohann Le Floch. "Théorie Spectrale Inverse Pour Les Opérateurs de Toeplitz 1D." PhD thesis. Rennes 1, 2014.

[Lec+97] Philippe Lecheminant, Bernard Bernu, Claire Lhuillier, Laurent Pierre, and Philippe Sindzingre. "Order versus Disorder in the Quantum Heisenberg Antiferromagnet on the Kagome Lattice Using Exact Spectra Analysis." In: *Physical Review B* 56.5 (Aug. 1997), pp. 2521–2529.

[LNK18] Chih-Yuan Lee, Bruce Normand, and Yingjer Kao. "Gapless Spin Liquid in the Kagome Heisenberg Antiferromagnet with Dzyaloshinskii-Moriya Interactions." In: *arXiv* 1809.09128 (2018).

[LO12] Nir Lev and Joaquim Ortega-Cerdà. "Equidistribution Estimates for Fekete Points on Complex Manifolds." In: *Journal of the European Mathematical Society* 18.2 (2012), pp. 425–464.

[LNR14] Mathieu Lewin, Phan Thành Nam, and Nicolas Rougerie. "Derivation of Hartree's Theory for Generic Mean-Field Bose Systems." In: *Advances in Mathematics* 254 (2014), pp. 570–621.

[LNR16] Mathieu Lewin, Phan Thành Nam, and Nicolas Rougerie. "The Mean-Field Approximation and the Non-Linear Schrödinger Functional for Trapped Bose Gases." In: *Transactions of the American Mathematical Society* 368.9 (2016), pp. 6131–6157.

[LNR17] Mathieu Lewin, Phan Thành Nam, and Nicolas Rougerie. "A Note on 2D Focusing Many-Boson Systems." In: *Proceedings of the American Mathematical Society* 145.6 (2017), pp. 2441–2454.

[Lie73] Elliott H. Lieb. "The Classical Limit of Quantum Spin Systems." In: *Communications in Mathematical Physics* 31.4 (1973), pp. 327–340.

[MM02] Xiaonan Ma and George Marinescu. "The Spin-c Dirac Operator on High Tensor Powers of a Line Bundle." In: *Mathematische Zeitschrift* 240.3 (2002), pp. 651–664.

[MM07] Xiaonan Ma and George Marinescu. *Holomorphic Morse Inequalities and Bergman Kernels*. Vol. 254. Springer Science & Business Media, 2007.

[MM08] Xiaonan Ma and George Marinescu. "Toeplitz Operators on Symplectic Manifolds." In: *Journal of Geometric Analysis* 18.2 (2008), pp. 565–611.

[MM15] Xiaonan Ma and George Marinescu. "Exponential Estimate for the Asymptotics of Bergman Kernels." In: *Mathematische Annalen* 362.3-4 (2015), pp. 1327–1347.

[Mar89] André Martinez. "Développements Asymptotiques et Effet Tunnel Dans l'approximation de Born-Oppenheimer." In: *Annales de l'IHP Physique Théorique*. Vol. 50. 1989, pp. 239–257.

[Mar92] André Martinez. "Estimations Sur l'effet Tunnel Microlocal." In: *Séminaire Équations aux dérivées partielles (Polytechnique)* 1991 (1992), pp. 1–10.

[Mar94a] André Martinez. "Estimates on Complex Interactions in Phase Space." In: *Mathematische Nachrichten* 167.1 (1994), pp. 203–254.

[Mar94b] André Martinez. "Precise Exponential Estimates in Adiabatic Theory." In: *Journal of Mathematical Physics* 35.8 (1994), pp. 3889–3915.

[Mar02] André Martinez. *An Introduction to Semiclassical and Microlocal Analysis. 2002*. Universitext. Springer, 2002.

[MS99] André Martinez and Vania Sordoni. "Microlocal WKB Expansions." In: *Journal of functional analysis* 168.2 (1999), pp. 380–402.

[Mat+02] Kazuyuki Matsuhira, Yukio Hinatsu, Kenichi Tenya, Hiroshi Amitsuka, and Toshiro Sakakibara. "Low-Temperature Magnetic Properties of Pyrochlore Stannates." In: *Journal of the Physical Society of Japan* 71.6 (June 2002), pp. 1576–1582.

[MS98] Dusa McDuff and Dietmar Salamon. *Introduction to Symplectic Topology*. 1998.

[Mel71] Anders Melin. "Lower Bounds for Pseudo-Differential Operators." In: *Arkiv för Matematik* 9.1 (1971), pp. 117–140.

[MS75] Anders Melin and Johannes Sjöstrand. "Fourier Integral Operators with Complex-Valued Phase Functions." In: *Fourier Integral Operators and Partial Differential Equations*. Springer, 1975, pp. 120–223.

[MS01] Anders Melin and Johannes Sjöstrand. "Bohr-Sommerfeld Quantization Condition for Non-Selfadjoint Operators in Dimension 2." In: *arXiv* math/0111293 (Nov. 2001).

[Mel07] Richard B. Melrose. *Introduction to Microlocal Analysis, MIT Course*. https://math.mit.edu/~rbm/iml/. Unpublished Lecture Notes. Dec. 2007.

[MN03] Tom Michoel and Bruno Nachtergaele. "The Large-Spin Asymptotics of the Ferromagnetic XXZ Chain." In: *Markov Processes and Related Fields* (July 2003).

[MN04] Tom Michoel and Bruno Nachtergaele. "Central Limit Theorems for the Large-Spin Asymptotics of Quantum Spins." In: *Probability Theory and Related Fields* 130.4 (Dec. 2004), pp. 493–517.

[MT00] Abderemane Morame and Françoise Truc. "Semiclassical Eigenvalue Asymptotics for a Schrödinger Operator with a Degenerate Potential." In: *Asymptotic Analysis* 22.1 (2000), pp. 39–49.

[MT06] Abderemane Morame and Françoise Truc. "Accuracy on Eigenvalues for a Schrödinger Operator with a Degenerate Potential in the Semi-Classical Limit." In: *Cubo, a Mathematical Journal* 9.2 (June 2006), pp. 1–15.

[Mum83] David Mumford. *Tata Lectures on Theta. I.* Vol. 28. Progress in Mathematics. Boston, MA: Birkhäuser Boston Inc., 1983.

[NP85] E. Jord o Neves and J. Fernando Perez. "Long Range Order in the Ground State of Two-Dimensional Antiferromagnets." In: (1985).

[OP15] S. A. Owerre and M. B. Paranjape. "Macroscopic Quantum Tunneling and Quantum-Classical Phase Transitions of the Escape Rate in Large Spin Systems." In: *Physics Reports* 546 (Jan. 2015), pp. 1–60.

[PV05] Yuval Peres and Bálint Virág. "Zeros of the Iid Gaussian Power Series: A Conformally Invariant Determinantal Process." In: *Acta Mathematica* 194.1 (2005), pp. 1–35.

[RN15] Nicolas Raymond and San Vũ Ngọc. "Geometry and Spectrum in 2D Magnetic Wells." In: *Annales de l'Institut Fourier* 65 (2015), pp. 137–169.

[RB93] Jan N. Reimers and A. John Berlinsky. "Order by Disorder in the Classical Heisenberg Kagome Antiferromagnet." In: *Physical Review B* 48.13 (Oct. 1993), pp. 9539–9554.

[Rob82] Didier Robert. "Comportment Asymptotique Des Valeurs Propres d'opérateurs de Type Schrödinger a Potentiel "Dégénéré"." In: *J. Math. Pure Appl.* 61 (1982), pp. 275–300.

[RS16] Julius Ross and Michael Singer. "Asymptotics of Partial Density Functions for Divisors." In: *The Journal of Geometric Analysis* (Sept. 2016), pp. 1–52.

[Rou17] Ophélie Rouby. "Bohr–Sommerfeld Quantization Conditions for Non-selfadjoint Perturbations of Selfadjoint Operators in Dimension One." In: *International Mathematics Research Notices* (2017).

[RSN18] Ophélie Rouby, Johannes Sjöstrand, and San Vũ Ngọc. "Analytic Bergman Operators in the Semiclassical Limit." In: *hal-01851770* (July 2018).

[Rue79] David Ruelle. "Ergodic Theory of Differentiable Dynamical Systems." In: *Publications Mathématiques de l'Institut des Hautes Études Scientifiques* 50.1 (Dec. 1979), pp. 27–58.

[Sac92] Subir Sachdev. "Kagome- and Triangular-Lattice Heisenberg Antiferromagnets: Ordering from Quantum Fluctuations and Quantum-Disordered Ground States with Unconfined Bosonic Spinons." In: *Physical Review B* 45.21 (June 1992), pp. 12377–12396.

[SWH87] G. Scharf, W. F. Wreszinski, and J. L. Hemmen. "Tunnelling of a Large Spin: Mapping onto a Particle Problem." In: *Journal of Physics A: Mathematical and General* 20.13 (1987), p. 4309.

[Sch00] Martin Schlichenmaier. "Deformation Quantization of Compact Kähler Manifolds by Berezin-Toeplitz Quantization." In: *Conférence Moshé Flato 1999*. Springer, 2000, pp. 289–306.

[SZ99] Bernard Shiffman and Steve Zelditch. "Distribution of Zeros of Random and Quantum Chaotic Sections of Positive Line Bundles." In: *Communications in Mathematical Physics* 200.3 (1999), pp. 661–683.

[SZ02] Bernard Shiffman and Steve Zelditch. "Asymptotics of Almost Holomorphic Sections on Symplectic Manifolds." In: *J. reine angew. Math.* 544 (2002), pp. 181–222.

[SZ08] Bernard Shiffman and Steve Zelditch. "Number Variance of Random Zeros on Complex Manifolds." In: *Geometric and Functional Analysis* 18.4 (2008), pp. 1422–1475.

[Sim83] Barry Simon. "Some Quantum Operators with Discrete Spectrum but Classically Continuous Spectrum." In: *Annals of physics* 146.1 (1983), pp. 209–220.

[Sjö82] Johannes Sjöstrand. *Singularites Analytiques Microlocales*. Vol. 95. Astérisque. Soc. Math. de France, 1982.

[Sjö83] Johannes Sjöstrand. "Analytic Wavefront Sets and Operators with Multiple Characteristics." In: *Hokkaido Math. Journal* 12.3 (1983), pp. 392–433.

[Sjö90] Johannes Sjöstrand. "Geometric Bounds on the Density of Resonances for Semiclassical Problems." In: *Duke mathematical journal* 60.1 (1990), pp. 1–57.

[Sjö03] Johannes Sjöstrand. "Resonances Associated to a Closed Hyperbolic Trajectory in Dimension 2." In: *Asymptotic Analysis* 36.2 (2003), pp. 93–113.

[SL97] R. R. Sobral and Claudine Lacroix. "Order by Disorder in the Pyrochlore Antiferromagnets." In: *Solid State Communications* 103.7 (Aug. 1997), pp. 407–409.

[Sou67] Jean-Marie Souriau. "Quantification Géométrique. Applications." In: *Annales de l'institut Henri Poincaré (A) Physique Théorique*. Vol. 6. Gauthier-villars, 1967, pp. 311–341.

[Ste16] Elias M. Stein. *Harmonic Analysis: Real-Variable Methods, Orthogonality, and Oscillatory Integrals*. Vol. 43. Princeton Mathematical Studies. Princeton University Press, 2016.

[Thu76] William Paul Thurston. "Some Simple Examples of Symplectic Manifolds." In: *Proceedings of the American Mathematical Society* 55.2 (1976), pp. 467–468.

[Tia90] Gang Tian. "On a Set of Polarized Kähler Metrics on Algebraic Manifolds." In: *Journal of Differential Geometry* 32.1 (1990), pp. 99–130.

[TO06] Alesky Tralle and John Oprea. *Symplectic Manifolds with No Kähler Structure*. Springer, 2006.

[Tru97] Françoise Truc. "Semi-Classical Asymptotics for Magnetic Bottles." In: *Asymptotic Analysis* 15.3-4 (1997), pp. 385–395.

[Tru08] Françoise Truc. "Born-Oppenheimer-Type Approximations for Degenerate Potentials: Recent Results and a Survey on the Area." In: *Methods of Spectral Analysis in Mathematical Physics*. Springer, 2008, pp. 403–413.

[Tsu10] Hajime Tsuji. "Dynamical Construction of Kähler-Einstein Metrics." In: *Nagoya Mathematical Journal* 199 (Sept. 2010), pp. 107–122.

[VG89] Joseph C. Várilly and JoséM Gracia-Bondía. "The Moyal Representation for Spin." In: *Annals of physics* 190.1 (1989), pp. 107–148.

[Ver96] Michèle Vergne. "Multiplicities Formula for Geometric Quantization, Part I." In: *Duke Mathematical Journal* 82.1 (1996), pp. 143–179.

[VCM08] Frank Verstraete, Juan Ignacio Cirac, and Valentin Murg. "Matrix Product States, Projected Entangled Pair States, and Variational Renormalization Group Methods for Quantum Spin Systems." In: *Advances in Physics* 57.2 (Mar. 2008), pp. 143–224.

[Vil+80] Jacques Villain, R. Bidaux, Jean-Pierre Carton, and Robert Conte. "Order as an Effect of Disorder." In: *Journal de Physique* 41.11 (1980), pp. 1263–1272.

[Vor89] André Voros. "Wentzel-Kramers-Brillouin Method in the Bargmann Representation." In: *Physical Review A* 40.12 (1989), p. 6814.

[Wal+98] Christian Waldtmann, Hans U. Everts, Bernard Bernu, Claire Lhuillier, Philippe Sindzingre, Philippe Lecheminant, and Laurent Pierre. "First Excitations of the Spin 1/2 Heisenberg Antiferromagnet on the Kagome Lattice." In: *The European Physical Journal B-Condensed Matter and Complex Systems* 2.4 (1998), pp. 501–507.

[Wan+06] An Wang, Weiping Yin, Liyou Zhang, and Guy Roos. "The Kähler-Einstein Metric for Some Hartogs Domains over Symmetric Domains." In: *Science in China Series A: Mathematics* 49.9 (2006), pp. 1175–1210.

[WB59] Hassler Whitney and François Bruhat. "Quelques propriétés fondamentales des ensembles analytiques-réels." In: *Commentarii Mathematici Helvetici* 33.1 (Dec. 1959), pp. 132–160.

[Woo97] Nicholas M. J. Woodhouse. *Geometric Quantization*. Oxford University Press, 1997.

[Wul+10] Dirk Wulferding, Peter Lemmens, Patric Scheib, Jens Röder, Philippe Mendels, Shaoyan Chu, Tianheng Han, and Young S. Lee. "Interplay of Thermal and Quantum Spin Fluctuations in the Kagome Lattice Compound Herbertsmithite." In: *Physical Review B* 82.14 (2010), p. 144412.

[ZZ10] Ofer Zeitouni and Steve Zelditch. "Large Deviations of Empirical Measures of Zeros of Random Polynomials." In: *International Mathematics Research Notices* 2010.20 (2010), pp. 3935–3992.

[Zel97] Steve Zelditch. "Index and Dynamics of Quantized Contact Transformations." In: *Annales de l'institut Fourier*. Vol. 47. Chartres: L'Institut, 1950-, 1997, p. 305.

[Zel00] Steve Zelditch. "Szegö Kernels and a Theorem of Tian." In: *Int. Math. Research Notices* 6 (2000).

[Zel13] Steve Zelditch. "Large Deviations of Empirical Measures of Zeros on Riemann Surfaces." In: *International Mathematics Research Notices* 2013.3 (2013), pp. 592–664.

[ZE95] Chen Zeng and Veit Elser. "Quantum Dimer Calculations on the Spin-1/2 Kagome Heisenberg Antiferromagnet." In: *Physical Review B* 51.13 (1995), p. 8318.

[Zwo12] Maciej Zworski. *Semiclassical Analysis*. Vol. 138. American Mathematical Soc., 2012.

Résumé en français des travaux de recherche

Alix Deleporte *

Université de Strasbourg, CNRS, IRMA UMR 7501, F-67000 Strasbourg, France

6 mars 2019

Résumé

Les opérateurs de Berezin–Toeplitz permettent de quantifier des fonctions, ou des symboles, sur des variétés kähleriennes compactes, et sont définies à partir du noyau de Bergman (ou de Szegő). Nous étudions le spectre des opérateurs de Toeplitz dans un régime asymptotique qui correspond à une limite semiclassique. Cette étude est motivée par le comportement magnétique atypique observé dans certains cristaux à basse température.

Nous étudions la concentration des fonctions propres des opérateurs de Toeplitz, dans des cas où les effets sous-principaux (du même ordre que le paramètre semiclassique) permet de différencier entre plusieurs configurations classiques, un effet connu en physique sous le nom de « sélection quantique ». Nous exhibons un critère général pour la sélection quantique et nous donnons des développements asymptotiques précis de fonctions propres dans le cas Morse et Morse–Bott, ainsi que dans un cas dégénéré.

Nous développons également un nouveau cadre pour le traitement du noyau de Bergman et des opérateurs de Toeplitz en régularité analytique. Nous démontrons que le noyau de Bergman admet un développement asymptotique, avec erreur exponentiellement petite, sur des variétés analytiques réelles. Nous obtenons aussi une précision exponentiellement fine dans les compositions et le spectre d'opérateurs à symbole analytique, et la décroissance exponentielle des fonctions propres.

*deleporte@math.unistra.fr

Les résultats et idées décrites ci-dessous ont paru dans les publications et prépublications suivantes :

[Del16] Alix Deleporte. “Low-Energy Spectrum of Toeplitz Operators : The Case of Wells”. In : *Journal of Spectral Theory (accepted)* (2016).

[Del17] Alix Deleporte. “Low-Energy Spectrum of Toeplitz Operators with a Miniwell”. In : *arXiv* 1610.05902 (2017).

[Del18a] Alix Deleporte. “Quantum Selection for Spin Systems”. In : *arXiv* 1808.00718 (2018).

[Del18b] Alix Deleporte. “The Bergman Kernel in Constant Curvature”. In : *arXiv* 1812.06648 (2018).

[Del18c] Alix Deleporte. “Toeplitz Operators with Analytic Symbols”. In : *arXiv* 1812.07202 (2018).

[Del19] Alix Deleporte. “WKB Eigenmode Construction for Analytic Toeplitz Operators”. In : *arXiv* 1901.07215 (2019).

L'analyse semiclassique étudie le lien entre mécanique quantique et mécanique classique. Son cadre usuel est celui des opérateurs de Schödinger et ses généralisations, par l'intermédiaire des opérateurs pseudodifférentiels. Des percées récentes dans l'étude expérimentale et théorique du comportement magnétique de certains matériaux nous ont amenés à étudier une limite semiclassique des systèmes de spins, par l'intermédiaire des opérateurs de Berezin–Toeplitz [1]. Les opérateurs de Toeplitz sont des opérateurs auto-adjoints sur un espace de Hilbert, dépendant d'un paramètre $N \in \mathbb{N}$. Nous avons étudié les plus petites valeurs propres, et les vecteurs propres associés, des opérateurs de Toeplitz dans la limite $N \to +\infty$, et nous avons donné des applications à l'étude des propriétés magnétiques de certains matériaux à basse température.

1 La limite des grands spins

L'objet de nos travaux est l'étude du spectre des *opérateurs de Toeplitz*, en utilisant principalement des outils d'analyse semiclassique et de géométrie complexe. L'un de nos objectifs est l'étude de *systèmes de spins* quantiques dans la limite des grands spins. Les systèmes de spins décrivent le comportement magnétique des solides ; certains cristaux, comme la Jarosite, le titanate de Holmium, ou la Herbertsmithite, présentent à basse température des propriétés peu communes et encore mal comprises, comme l'émergence de *glaces de spin* [Mat+02 ; Har+97 ; Lag+10] et, supposément, de *liquides de spins* [DMS12 ; Iqb+13 ; IPB14 ; Fu+15 ; Han+16 ; LNK18].

Le modèle quantique d'un spin, qui décrit des degrés de libertés magnétiques internes d'une particule, consiste en un triplet de matrices hermitiennes (S_x, S_y, S_z), qui agissent sur un espace hilbertien de dimension finie $\mathcal{H}$, et qui vérifient les règles de commutation suivantes :

$$[S_x, S_y] = iS_z \qquad [S_y, S_z] = iS_x \qquad [S_z, S_x] = iS_y.$$

Ces triplets sont classifiés par la dimension de leurs composantes irréductibles : il y a exactement un triplet, à conjugaison près, pour chaque dimension. Cette dimension est liée au *spin total* (ou, plus simplement, *spin*) du modèle, qui est le nombre S tel que la dimension de $\mathcal{H}$ est $2S + 1$. L'exemple le plus simple, à spin $S = \frac{1}{2}$, est le triplet des matrices de Pauli [Gou25] :

$$S_x = \frac{1}{2}\begin{pmatrix} 0 & 1 \\ 1 & 0 \end{pmatrix} \qquad S_y = \frac{1}{2}\begin{pmatrix} 0 & i \\ -i & 0 \end{pmatrix} \qquad S_z = \frac{1}{2}\begin{pmatrix} -1 & 0 \\ 0 & 1 \end{pmatrix}.$$

On modélise l'interaction magnétique entre plusieurs atomes identiques par un opérateur agissant sur une puissance tensorielle de $\mathcal{H}$. S'il y a d particules, l'espace de Hilbert correspondant est $\mathcal{H}^{\otimes d}$. Pour chaque $1 \leq j \leq d$, l'opérateur $I^{\otimes j-1} \otimes S_x \otimes I^{\otimes d-j}$ est la première composante du spin au site j ; on note S_x^j cet opérateur. Les opérateurs de spins sont alors définis comme des polynômes en les S_a^j pour $1 \leq j \leq d$ et $a \in \{x, y, z\}$. Par exemple, si les atomes forment un graphe non dirigé, de sorte

1. Nous dirons plus simplement « opérateurs de Toeplitz » malgré l'ambiguïté de ce terme ; nous renvoyons aux derniers paragraphes de la sous-section 2.

que certains atomes sont reliés les uns aux autres, alors pour tout $J \in \mathbb{R}$ on peut construire l'opérateur de Heisenberg

$$H_{Heis} = J \left[\sum_{j \sim k} S_x^j S_x^k + S_y^j S_y^k + S_z^j S_z^k \right].$$

Ici, on note $j \sim k$ lorsque les sites j et k sont voisins dans le graphe. Quand $J < 0$, on dit que le modèle est *ferromagnétique*. Quand $J > 0$ on parle de modèle *antiferromagnétique*.

Les propriétés à basse tempéretaure d'un matériau sont déterminées par les petites valeurs propres, et les vecteurs propres associés, d'un opérateur de spin. Dans les conditions expérimentales, on a peu d'espoir de diagonaliser explicitement cette matrice de taille $\dim(\mathcal{H})^d = (2S+1)^d$, où d est le nombre d'atomes dans le matériau et est typiquement d'ordre 10^{23} (une mole).

Pour pouvoir étudier les propriétés thermodynamiques de ces systèmes, ainsi que les vecteurs propres associés à la plus petite valeur propre, qu'on appelle états fondamentaux, un *modèle classique* a été proposé dans [BK52] et consiste, dans une certaine mesure, en un cas limite du modèle quantique dans la limite des grands spins $S \to +\infty$, de la même manière que la mécanique classique est un modèle effectif pour la mécanique quantique lorsque la constante de Planck $\hbar$ est très petite.

Dans le modèle des spins classiques, un spin est un élément de $\mathbb{S}^2$, de sorte que l'espace des configurations à d spins est $(\mathbb{S}^2)^d$. Par exemple, le modèle de Heisenberg classique est la fonction suivante définie sur $(\mathbb{S}^2)^d$:

$$h_{Heis} = J \left(\sum_{j \sim k} x_j x_k + y_j y_k + z_j z_k \right).$$

Ici, x, y, z sont les trois fonctions coordonnées pour l'immersion habituelle de la sphère dans $\mathbb{R}^3$. Il est beaucoup plus simple de trouver le minimum de la fonction lisse h_{Heis} sur $(\mathbb{S}^2)^d$ que de trouver les valeurs propres et vecteurs propres d'une grande matrice ; si $J > 0$ par exemple, et si le graphe est biparti, les configurations minimales classiques sont telles que chaque spin est opposé à ses voisins. En revanche, il n'y a pas d'expression explicite générale pour la plus petite valeur propre et les vecteurs propres associés du modèle de Heisenberg antiferromagnétique quantique.

Une situation plus intrigante pour le modèle de Heisenberg antiferromagnétique classique est le cas *frustré*, où le graphe est non biparti. Si trois atomes dans le graphe forment un triangle, il n'est pas possible que chaque spin soit opposé à celui de tous ses voisins. Par exemple, la Jarosite et la Herbertsmithite contiennent des couches bidimensionnelles d'atomes qui forment un réseau Kagome, représenté sur la figure 1. Le lieu minimal du modèle de Heisenberg antiferromagnétique classique (ou ses sous-graphes) est une variété algébrique qui n'est pas lisse. Diverses configurations de spins classiques minimisent l'énergie mais il n'y a pas de symétrie du problème qui permette de se réduire à un plus petit ensemble de configurations. La présence ou l'absence de symétries est cruciale dans l'analyse du cas quantique : si le modèle présente une symétrie, on s'attend à ce que l'état fondamental (s'il est unique) soit invariant selon cette symétrie, et donc qu'il soit réparti uniformément près des configurations classiques minimales. Dans le cas du réseau Kagome, puisqu'il n'y a pas de symétrie sous-jacente, on ne peut pas déterminer le comportement de l'état fondamental.

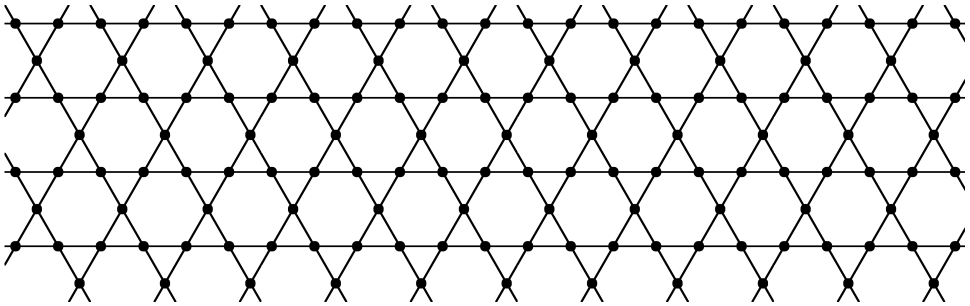

FIGURE 1 – Le réseau Kagome

Le cadre le plus étudié en analyse semiclassique est celui des opérateurs de Schrödinger, de la forme $-\hbar^2\Delta + V$, où V est une fonction à valeurs réelles qui agit comme un opérateur de multiplication, et $\hbar \to 0$. Pour ces opérateurs, les propriétés des états à basse énergie, et le lien avec le modèle classique associé, sont bien connus. Dans le cas général, l'état fondamental se concentre là où V est minimal. Dans certaines situations, on peut être encore plus précis. Helffer et Sjöstrand [HS86a] ont étudié des situations où V est minimal le long d'une sous-variété, sans hypothèse de symétrie. La *dégénérescence* classique (il y a une infinité de configurations à énergie minimale) est alors levée pour le système quantique associé : lorsque $\hbar \to 0$, l'état fondamental de cet opérateur se concentre seulement sur un sous-ensemble du lieu minimal de V. Ce phénomène est appelé *sélection quantique*.

En se fondant sur l'analogie entre l'analyse semiclassique et la limite des grands spins, Douçot et Simon [DS98] ont prédit l'apparition d'une sélection quantique pour le modèle de Heisenberg antiferromagnétique sur le réseau Kagome : parmi le lieu minimal classique extrêmement compliqué, les vecteurs propres quantiques de petite énergie devraient se concentrer (en un sens à préciser) sur quelques configurations particulières lorsque le spin S tend vers l'infini. Ce résultat n'est pas contenu dans l'article [HS86a] qui étudie uniquement les opérateurs de Schrödinger, et dans lequel le lieu minimal classique est une variété lisse.

Des études théoriques pour la sélection quantique ont été réalisées par quelques physiciens dans la limite des grands spins [Chu92 ; RB93 ; DS98], mais elles ne sont pas fondées sur des résultats rigoureux, et certains termes manquent dans les calculs, ce qui mène à une description semiclassique incorrecte pour certains systèmes.

Une partie de nos résultats traite de la sélection quantique pour les systèmes de spins, et plus généralement pour les opérateurs de Toeplitz. Nous démontrons qu'une sélection quantique apparaît sous des hypothèses très faibles, et que les règles de sélection (en quels points minimaux classiques l'état fondamental se concentre) suivent une loi explicite. Nous étudions aussi la vitesse de décroissance de l'état fondamental en-dehors du lieu minimal de l'énergie classique : dans le cas général la décroissance est plus rapide que toute puissance de S^{-1} ; si l'énergie classique est analytique, l'état fondamental décroît au moins à vitesse e^{-cS} pour un certain $c > 0$.

2 Quantification de Toeplitz

Le lien entre mécaniques quantique et classique fait intervenir un procédé de *quantification*, qui associe à un modèle classique un modèle quantique dépendant

d'un paramètre $\hbar$, puis une *analyse semiclassique* du modèle quantique dans la limite $\hbar \to 0$.

Une *quantification* consiste à associer, à une variété symplectique M, un espace de Hilbert $\mathcal{H}$, et à une fonction f à valeurs réelles sur M, un opérateur auto-adjoint $Op(f)$ sur $\mathcal{H}$, le tout dépendant d'un paramètre $\hbar$, de sorte que le crochet de Poisson des fonctions corresponde au commutateur des opérateurs dans la limite semi-classique, c'est-à-dire :

$$[Op(f), Op(g)] = i\hbar Op(\{f, g\}) + O_{\hbar\to 0}(\hbar^2).$$

Le procédé de quantification le mieux connu est la *quantification de Weyl* qui associe à une fonction sur le cotangent $M = T^*X$ d'une variété riemannienne un opérateur pseudo-différentiel sur $\mathcal{H} = L^2(X)$. Les opérateurs de spins ne sont pas adaptés au cadre de Weyl. En effet, pour les opérateurs de spin, l'espace de Hilbert $\mathcal{H}$ doit être de dimension finie $(2S+1)^d$, et l'espace des configurations classiques M (aussi appelé *espace des phases*), un produit de sphères, est compact, donc n'est pas un cotangent.

Sur certaines variétés complexes, un procédé commode de quantification est la quantification de Toeplitz, introduite par Berezin pour les systèmes de spins [Ber75]. Les ingrédients géométriques sont : une variété symplectique M munie d'une structure complexe [2], et un fibré en droites complexes L sur M, avec une métrique hermitienne dans les fibres. La sphère $\mathbb{S}^2 = \mathbb{CP}^1$ est un cas particulier de variété sur laquelle on peut effectuer la quantification de Toeplitz.

L'espace de Hilbert $\mathcal{H}$, en quantification de Toeplitz, est défini comme l'espace des sections holomorphes de L de carré intégrable ; on peut remplacer L par ses puissances tensorielles $L^{\otimes N}$ et on obtient une suite d'espaces de Hilbert indexée par $\mathbb{N}$. Si M est compact, le concept de sections holomorphes est plus riche que celui de fonctions holomorphes, puisqu'ici toutes les fonctions holomorphes sont constantes. Dans le cas plat $M = \mathbb{C}^n$, que nous étudierons en détail car il constitue un modèle local universel en première approximation, il y a beaucoup de fonctions holomorphes mais, parmi elles, seule la fonction nulle est de carré intégrable. En revanche, l'*espace de Bargmann*, constitué des fonctions holomorphes qui sont intégrables par rapport au poids $z \mapsto e^{|z|^2}$, est de dimension infinie. Dans tous les cas, il y a beaucoup plus de sections holomorphes de L (et, a fortiori, de ses puissances tensorielles $L^{\otimes N}$) que de fonctions holomorphes sur M.

Définition 2.1.

— L'espace hilbertien des sections holomorphes de $L^{\otimes N}$ sera noté $H_0(M, L^{\otimes N})$. Cet espace est naturellement un sous-espace fermé de $L^2(M, L^{\otimes N})$, formé de toutes les sections (pas forcément holomorphes) de $L^{\otimes N}$. On peut donc considérer le projecteur orthogonal

$$S_N : L^2(M, L^{\otimes N}) \to H_0(M, L^{\otimes N}).$$

— Le *projecteur de Bergman* S_N est l'ingrédient principal dans la quantification de fonctions sur M. L'*opérateur de Toeplitz* (ou, plus précisément, opérateur de Toeplitz contravariant) associé à une fonction $f \in C^\infty(M, \mathbb{C})$ est défini par :

2. sous certaines hypothèses géométriques : cette variété doit être *de Kähler et quantifiable*.

$$\begin{array}{rccc} T_N(f): & H_0(M, L^{\otimes N}) & \to & H_0(M, L^{\otimes N}) \\ & u & \mapsto & S_N(fu). \end{array}$$

Si f est à valeurs réelles et à croissance modérée en l'infini, alors $T_N(f)$ est essentiellement auto-adjoint sur le domaine dense $\{u \in H_0(M, L^{\otimes N}), |u|_L^2 |f| \in L^1(M)\}$. Les opérateurs de Toeplitz ne forment pas exactement une algèbre. Cependant, il y a des développements asymptotiques de produits d'opérateurs de Toeplitz [Sch00 ; Cha03], qui s'écrivent de la manière suivante :

$$T_N(f)T_N(g) = T_N(fg) + N^{-1}T_N(C_1(f,g)) + N^{-2}T_N(C_2(f,g)) + \dots,$$

où les C_j sont des opérateurs bidifférentiels. En particulier, si $\{\cdot,\cdot\}$ représente le crochet de Poisson correspondant à la structure symplectique sur M, alors on peut montrer que :

$$[T_N(f), T_N(g)] = \frac{i}{N} T_N(\{f,g\}) + O_{L^2 \mapsto L^2}(N^{-2}).$$

Le paramètre $N \in \mathbb{N}$ correspond à $\hbar^{-1}$ dans l'interprétation semiclassique.

On peut aussi définir des *opérateurs de Toeplitz covariants* qui sont des opérateurs à noyau dont le symbole associé est la restriction du noyau à la diagonale. Les quantifications de Toeplitz covariantes et contravariantes sont équivalentes à une modification sous-principale et une erreur $O(N^{-\infty})$ près.

Si M est compacte, alors $H_0(M, L^{\otimes N})$ est de dimension finie, si bien que que $T_N(f)$ peut être considéré comme une matrice, dont la taille et les éléments dépendent de N. Dans le cas particulier où $M = \mathbb{CP}^1 = \mathbb{S}^2$, les opérateurs de Toeplitz associés aux trois fonctions coordonnées x, y, z sont, à une constante multiplicative près, les trois opérateurs de spin S_x, S_y, S_z avec spin total $S = \frac{N}{2}$. Lorsque le spin tend vers l'infini, le paramètre semiclassique N^{-1} tend vers zéro.

Il y a une équivalence microlocale entre les quantifications Toeplitz et Weyl, avec correction sous-principale (termes d'ordre $\hbar$) non nulle. La transformée de Fourier–Bros–Iagolnitzer (FBI), qui permet de voir dans l'espace des phases l'action des opérateurs pseudodifférentiels, est une formulation de cette équivalence entre Toeplitz et Weyl dans le cas $M = \mathbb{C}^n = T^*\mathbb{R}^n$. Les opérateurs de Toeplitz sont couramment utilisés de manière auxiliaire dans le traitement de problèmes semiclassiques. En effet, les opérateurs de Toeplitz jouissent de la propriété de positivité suivante, qui est fausse pour la quantification de Weyl :

$$f \geq 0 \Rightarrow T_N(f) \geq 0.$$

Comme annoncé précédemment, les opérateurs de Toeplitz incluent également les systèmes de spins comme importante classe d'exemples et d'applications. En particulier, l'étude de cette quantification permet de *comprendre la limite des grands spins comme une limite semiclassique*, une interprétation physique qui est l'une des principales motivations de ces travaux.

La quantification de Toeplitz s'étend à des situations plus générales que les variétés quantifiables de Kähler telles que la géométrie presque Kähler [BG81], la quantification spin^c–Dirac [Ver96 ; BU96 ; MM02] ou les laplaciens de Bochner [GU88].

Avant de décrire nos contributions, faisons deux remarques de terminologie :

— Il existe une description alternative des objets de la quantification des Toeplitz, où au lieu de sections d'une puissance d'un fibré L on considère des fonctions équivariantes sur le fibré dual L^*. L'analogue du projecteur de Bergman est nommé projecteur de Szegő. Les deux formalismes sont équivalents, et nous énoncerons indistinctement des résultats concernant les projecteurs de Bergman ou de Szegő, en fonction du point de vue utilisé dans les travaux auxquels nous nous réfèrons.

— Le terme « opérateurs de Toeplitz » se rapporte aussi à des généralisations des matrices de Toeplitz (dont les coefficients sont constants le long des diagonales). Ces opérateurs-là n'ont pas de lien avec les systèmes de spins.

3 Contributions

Dans cette section, nous décrivons nos contributions majeures et les rapportons à des résultats plus anciens.

Donnons d'abord une liste de descriptions courtes de nos théorèmes principaux :

Liste des théorèmes

Théorème A (Développement en fond de puits pour l'état fondamental)
Théorème B (Description des états excités en fond de puits)
Théorème C (Effets sous-principaux sur la localisation)
Théorème D (Étude des minipuits)
Théorème E (Étude des points de croisements)
Théorème F (Lois de Weyl à basse énergie)

Théorème G (Contrôle exponentiel du noyau de Bergman – cas homogène)
Théorème H (Contrôle exponentiel du noyau de Bergman – cas général)
Théorème I (Algèbre des opérateurs de Toeplitz analytiques)
Théorème J (Décroissance exponentielle dans la région classiquement interdite)
Théorème K (Construction WKB en fond de puits analytique)

3.1 Asymptotique des noyaux de Bergman et de Szegő

Les estimées sur les opérateurs de Toeplitz sont fondées sur une étude détaillée du noyau de Szegő (ou de Bergman). Nous avons développé l'analyse asymptotique du projecteur de Szegő, en régularité C^∞ pour des variétés presque Kähler, et en régularité analytique pour des variétés de Kähler. Dans le cas C^∞ nous avons amélioré la vitesse de décroissance en dehors de la diagonale : les estimées précédemment connues [MM07] étaient, pour x et y proches l'un de l'autre, dans une carte locale,

$$\left\| S_N(x,y) - \frac{N^n}{\pi^n} e^{-\frac{N}{2}|x-y|^2 + iN\Im(x\cdot\overline{y})} \left(1 + \sum_{j=1}^{K} N^{-j/2} b_j(\sqrt{N}x, \sqrt{N}y)\right) \right\| \leq$$
$$CN^{n-(K+1)/2} \left(1 + |\sqrt{N}x| + |\sqrt{N}y|\right)^m e^{-C'\sqrt{N}|x-y|} + O(N^{-\infty}).$$

Ici $\Im$ dénote la partie imaginaire, n la dimension (complexe) de la variété et les b_j sont des polynômes.

Dans le cas Kähler [Cha03 ; BBS08], on peut remplacer $e^{-C'\sqrt{N}|x-y|}$ par $e^{-C'N|x-y|^2}$, qui décroît plus vite loin de la diagonale.

Nous avons démontré la même amélioration dans le cas presque Kähler (voir [Del16]), en suivant les développements asymptotiques présentés dans [SZ02].

Ces estimées sont utiles dès que le facteur $O(N^{-\infty})$ est plus petit que l'erreur exponentielle ; en utilisant l'estimée ci-dessus, la région contrôlée est :

$$\left\{\mathrm{dist}(x,y) = o\left(\frac{1}{\sqrt{N}\log(N)}\right)\right\},$$

alors que, si on peut remnplacer $e^{-C'\sqrt{N}|x-y|}$ par $e^{-C'N|x-y|^2}$, cette région est :

$$\left\{\mathrm{dist}(x,y) = o\left(\frac{1}{\sqrt{N\log(N)}}\right)\right\}.$$

Les résultats ci-dessus se fondent sur un calcul microlocal élaboré, et en particulier, l'étude d'opérateurs intégraux de Fourier à phase complexe [MS75].

Un cas particulièrement intéressant est celui des variétés de Kähler homogènes (c'est-à-dire à courbure sectionnelle constante) telles que $\mathbb{CP}^1$, ou bien les produits de variétés homogènes, comme les espaces de phases des systèmes de spins. Dans ce cas, un contrôle exponentiel du noyau de Bergman a été esquissé dans [Chr13] et démontré dans [HLX17], en utilisant des techniques analytiques microlocales avancées.

Nous avons obtenu, dans le cas homogène, une preuve élémentaire pour le contrôle exponentiel du noyau de Bergman (théorème G). Le noyau est de la forme

$$S_N(x,y) = a(N)\Psi^{\otimes N}(x,\overline{y})\mathbb{1}_{\mathrm{dist}(x,y)<r} + O(e^{-cN}).$$

Ici, a est un polynôme de degré n, et Ψ est une section de $L\boxtimes\overline{L}$ dans un voisinage de la diagonale, dont la norme atteint un maximum non dégénéré sur la diagonale.

Dans le cas général d'une variété de Kähler analytique, nous avons développé un calcul symbolique analytique nouveau, de manière à obtenir un contrôle exponentiel du noyau de Bergman. Des résultats partiels [HLX17] étaient de la forme :

$$S_N(x,y) = \Psi^N(x,\overline{y})\sum_{k=0}^{c\sqrt{N}} N^{n-k}a_k(x,\overline{y}) + O(e^{-c'\sqrt{N}}),$$

où il existe C, R tels que, pour tout $k \geq 0$,

$$\sup(a_k) \leq CR^k(k!)^2.$$

Nous avons amélioré ces résultats en démontrant (théorème H) que le noyau de Bergman est connu à un terme exponentiellement petit près, sur n'importe quelle variété de Kähler analytique :

$$S_N(x,y) = \Psi^N(x,\overline{y})\sum_{k=0}^{cN} N^{n-k}a_k(x,\overline{y}) + O(e^{-c'N}),$$

où

$$\sup(|a_k|) \leq CR^k k!.$$

La preuve utilise nos nouvelles classes de symboles analytiques, qui généralisent les classes usuelles [Sjö82]. Étant donnés certains paramètres réels $r > 0, m$, nous dirons qu'une fonction sur un ouvert lisse $U \in \mathbb{R}^d$ appartient à l'espace $H(m, r, U)$ lorsqu'il existe $C > 0$ tel que, pour tout $j \geq 0$, on ait

$$\|u\|_{C^j(U)} \leq C \frac{r^j j!}{(j+1)^m}.$$

Le plus petit C tel que le contrôle ci-dessus est valide est une norme de Banach pour $H(m, r, U)$. De telles fonctions sont analytiques. Réciproquement, pour tout $V \subset\subset U$, toute fonction analytique sur U appartient à $H(m, r, V)$ pour un certain choix de r, m.

La généralisation de cette notion mène à la définition de *symbole (formel) analytique* : étant donnés certains paramètres réels $r > 0$, $R > 0$, m, une suite de fonctions $(u_k)_{k \geq 0}$ sur U appartient à l'espace $S_m^{r,R}(U)$ lorsqu'il existe $C > 0$ tel que, pour tous $j \geq 0, k \geq 0$, on ait

$$\|u_k\|_{C^j(U)} \leq C \frac{r^j R^k (j+k)!}{(j+k+1)^m}.$$

À nouveau, le plus petit C définit une norme sur $S_m^{r,R}(U)$.

Ces classes analytiques, définies et étudiées dans [Del18c], se comportent bien vis-à-vis des manipulations habituelles sur les fonctions (multiplication, changement de variables, ...) et, surtout, vis-à-vis du lemme de phase stationnaire. Une autre propriété cruciale est la sommation de ces symboles : si $\hbar$ est un petit paramètre (ici on aura toujours $\hbar = N^{-1}$), alors pour $c > 0$ petit dépendant de R, la somme

$$\sum_{k=0}^{c\hbar^{-1}} \hbar^k u_k$$

est uniformément bornée lorsque $\hbar \to 0$; dans cette somme, les termes d'ordre $\hbar^{-1}$ sont exponentiellement petits, de sorte que le choix précis de c n'a qu'une influence exponentiellement petite sur la somme. Cette propriété de sommation, ainsi que la phase stationnaire, nous permet d'étudier le noyau de Bergman et les opérateurs de Toeplitz à une erreur exponentiellement petite près.

Des idées similaires apparaissent dans la littérature et ont été appliquées avec succès à la théorie des opérateurs pseudodifférentiels à symbole analytique ou Gevrey. Les premiers résultats dans ce contexte [BK67] utilisent un cas particulier de nos classes analytiques, lorsque $m = 0$; de là a été développée une théorie plus géométrique des Opérateurs Intégraux de Fourier analytiques [Sjö82], permettant de s'affranchir graduellement des paramètres r et R. Il peut paraître surprenant que jamais n'ait été envisagée l'introduction d'un paramètre m, de sorte à mimer la définition des espaces de Hardy sur la boule unité, alors même que la manipulation des fonctions analytiques en est simplifiée (l'espace $H(m, r, U)$ est stable par produit si et seulement si $m \geq 3$). À plusieurs endroits, il est essentiel de pouvoir prendre m arbitrairement grand. Une erreur $O(e^{-cN})$ hors d'un voisinage de taille fixée de la diagonale constitue un résultat optimal, à la détermination de la constante c' près.

Un travail récent et indépendant [RSN18] établit ce même résultat en utilisant des opérateurs intégraux de Fourier analytiques.

3.2 Concentration des fonctions propres à basse énergie

Retournons au cas lisse. En quantification de Toeplitz, une borne inférieure facile sur les opérateurs de Toeplitz est :

$$T_N(f) \geq \min(f).$$

L'amélioration de cette borne, dans l'esprit de l'inégalité de Melin [Mel71], nous a permis de démontrer une sélection quantique pour des opérateurs de Toeplitz.

Nous avons associé, à toute fonction lisse f sur une variété compacte M, une fonction caractéristique μ, définie là où f atteint son minimum, qui est de régularité hölderienne et à valeurs dans $\mathbb{R}^+$. La valeur de la fonction μ en un point ne dépend que de la hessienne de f au point considéré et de la structure de Kähler sur M. Nous avons alors démontré (théorème C) que, si $f \geq 0$ est lisse, il existe $\epsilon > 0$ et $C > 0$ tels que

$$\left|\min \sigma(T_N(f)) - \min(f) + N^{-1} \min(\mu)\right| \leq CN^{-1-\epsilon}.$$

Cette estimée globale, et ses versions locales, mènent à un résultat de sélection quantique (théorème C) : toute fonction propre d'un opérateur de Toeplitz dont la valeur propre associée est suffisamment petite est localisée, à $O(N^{-\infty})$ près, sur

$$\{x \in M, h(x) \text{ est minimale}, \mu(x) \text{ est minimale}\}.$$

Ici, on dit qu'une suite $(u_N)_{N\in\mathbb{N}}$ de sections normalisées de $L^{\otimes N}$ est localisée sur un fermé $Z \subset M$ lorsque, pour tout ouvert V à distance strictement positive de Z, on a :

$$\int_{m\in V} \|u_N(m)\|_h^2 \mathrm{dVol}(m) = O_V(N^{-\infty}).$$

Cette notion correspond à la microlocalisation en calcul pseudodifférentiel.

Dans trois cas particuliers, nous avons obtenu un développement asymptotique complet de la première valeur propre et du vecteur propre associé en puissances décroissantes de N, ainsi qu'un équivalent du nombre de petites valeurs propres (avec multiplicité).

— Le premier de ces cas est un fond de puits non dégénéré (théorèmes A et B), qui généralise une partie des résultats de [LF14a] en dimension quelconque, sans hypothèse de complète intégrabilité.

— Le deuxième cas (théorème D) se situe dans l'esprit des « minipuits » [HS86a]. On suppose que f est minimale le long d'une sous-variété isotrope, sur laquelle μ admet un unique minimum non dégénéré.

— Le troisième cas, un « point de croisement » (théorème E), consiste en une fonction f qui atteint son minimum sur l'union de deux sous-variétés isotropes dont l'intersection est transverse et isotrope. À notre connaissance, ce cas n'a jamais été traité pour les opérateurs pseudodifférentiels ou Schrödinger (mais nos résultats s'appliquent en particulier aux opérateurs pseudodifférentiels à symbole raisonnable). Il était néanmoins connu que l'opérateur $-\Delta + x^2y^2$ est à résolvante compacte sur $L^2(\mathbb{R}^2)$ [Sim83], une propriété liée à la sélection quantique.

On peut alors comparer les lois de Weyl pour le cas minipuits et le cas de croisement (théorème F).

1. Si près d'un point où μ est minimale le symbole principal atteint son minimum d'une manière transversalement non dégénérée sur une sous-variété isotrope de dimension r, le nombre de valeurs propres correspondantes dans l'intervalle

$$[\min \sigma(T_N(f)), \min \sigma(T_N(f)) + N^{-1}\Lambda_N]$$

est d'ordre $(N^{\frac{1}{2}}\Lambda_N)^r$ lorsque $N^{-\frac{1}{2}+\epsilon} \leq \Lambda_N \leq \epsilon$.

2. Si près d'un point où μ est minimale, les hypothèses du théorème E s'appliquent, le nombre de valeurs propres correspondantes dans l'intervalle

$$[\min \sigma(T_N(f)), \min \sigma(T_N(f)) + N^{-1}\Lambda_N]$$

est d'ordre $(N^{\frac{1}{3}}\Lambda_N)^{\frac{3r}{2}} \log(N^{\frac{1}{3}}\Lambda_N)$, lorsque $N^{-\frac{1}{3}+\epsilon} \leq \Lambda_N \leq \epsilon$.

En particulier, en fonction de la taille relative de Λ_N et d'une puissance négative de $\log(N)$, il y a plus de valeurs propres associées à un minipuits, ou à un point de croisement, dans la fenêtre spectrale considérée.

La fonction μ est difficilement calculable pour des problèmes qui correspondent aux conditions expérimentales, car elle dépend du spectre d'une matrice, non autoadjointe, dont la dimension est le nombre de particules. La sélection quantique est particulièrement pertinente dans le contexte des systèmes de spins antiferromagnétiques frustrés, comme le réseau Kagome, où le lieu minimal est une variété stratifiée et où la fonction caractéristique μ varie le long de cette variété. Notre résultat général de sélection quantique est valable dans ce contexte ; il reste à déterminer en quels points μ est minimale. Une conjecture répandue dans la littérature physique sur le sujet énonce que μ devrait être minimale sur les configurations coplanaires, qui forment un ensemble discret. Ce résultat réduirait donc le problème, dans la limite semiclassique, à un hamiltonien effectif sur un modèle de Potts, dont l'expression n'est pas connue à ce jour.

Nous avons également développé une analyse numérique de ce problème. Étant donnée une configuration classique sur un système de spins de taille finie, on peut calculer une valeur numérique de μ. Le procédé de minimisation sous contrainte associé (trouver les minima de μ parmi les points où f est minimale) semble indiquer que les configurations planaires sont des minima globaux, mais notre approche est trop instable numériquement pour pouvoir être considérée comme une preuve numérique.

Les résultats ci-dessus établissent une sélection quantique pour les systèmes de spins comme prédit dans [DS98]. Néanmoins, la fonction μ est différente du critère de sélection en quantification de Weyl.

Dans le cas particulier des systèmes de spins sur un produit de sphères, nous avons écrit explicitement les règles de calcul de la fonction μ (voir [Del18a]), de manière à diffuser nos résultats auprès de la communauté physique.

3.3 Calcul des opérateurs de Toeplitz à régularité analytique

En utilisant les techniques analytiques développées pour l'étude du noyau de Bergman dans le cas d'une variété de Kähler analytique, nous avons démontré une loi de composition et d'inversion (théorème I) pour les opérateurs de Toeplitz covariants

associés à des éléments de nos classes analytiques $S_m^{r,R}$. Si $f \in S_m^{r,R}$ et $g \in S_m^{2r,2R}$, alors il existe $f\sharp g \in S_m^{2r,2R}$, avec $\|f\sharp g\|_{S_m^{2r,2R}} \leq C\|f\|_{S_m^{r,R}}\|g\|_{S_m^{2r,2R}}$, tel que

$$T_N^{cov}(f)T_N^{cov}(g) = T_N^{cov}(f\sharp g) + O(e^{-c'N}).$$

On peut aussi inverser les opérateurs dont le symbole principal ne s'annule pas, avec un contrôle des normes analytiques du symbole.

Les classes de symboles analytiques covariantes et contravariantes ne sont pas équivalentes, mais on peut passer des unes aux autres au prix d'une perte de régularité.

Ce résultat de composition et d'inversion des opérateurs de Toeplitz analytiques mène à un résultat général de localisation exponentiellement rapide (théorème J) : étant donnée une fonction analytique réelle f sur une variété de Kähler analytique compacte, si $(u_N)_{N\geq 0}$ est une suite de fonctions propres normalisées de $T_N(f)$ avec valeurs propres associées $\lambda_N = E + o(1)$, alors pour tout ouvert V à distance strictement positive de $\{f = E\}$ il existe $c > 0$ tel que

$$\int_V \|u_N\|_h^2 \mathrm{d}Vol = O(e^{-cN}).$$

Dans le cas particulier d'un symbole avec un minimum local non dégénéré, nous avons réalisé un développement de Brillouin–Kramers–Wentzel (BKW) de l'état fondamental approché, avec une erreur exponentiellement petite (théorème K).

Remarque 3.1 (Cas Gevrey)**.** Les méthodes développées dans [Del18c] dans le cadre analytique pourraient être appliquées au cas Gevrey. Des classes de symboles s-Gevrey peuvent être construites en modifiant la Définition 6.2 pour mettre les factorielles à la puissance s. Les fonctions s-Gevrey admettent des extensions presques holomorphes avec une erreur contrôlée près du lieu réel, de sorte que tous les résultats de la partie II devraient être valides dans le cas Gevrey, au prix des deux affaiblissements suivants :

— La sommation d'un symbole s-Gevrey est effectuée jusqu'au rang $k = cN^{\frac{1}{s}}$;

— Tous les contrôles du type $O(e^{-c'N})$ sont remplacés par $O(e^{-c'N^{\frac{1}{s}}})$.

Par exemple, nous sommes convaincus que le noyau de Bergman, sur une variété de Kähler quantifiable compacte s-Gevrey est déterminé à $O(e^{-c'N^{\frac{1}{s}}})$ près par un symbole s-Gevrey. Son noyau décroît à vitesse $N^{\dim(M)}e^{-\left(\frac{1}{2}-\right)N\,\mathrm{dist}(x,y)^2}$ dès lors que $\mathrm{dist}(x,y) \leq cN^{-\frac{s-1}{2s}}$. Ceci améliorerait des résultats récents [HX18].

4 Discussion

L'objectif de ce projet était l'étude de la concentration des états de basse énergie des systèmes de spins, dans la limite semiclassique. L'introduction de la quantification de Toeplitz nous a permis de donner un sens précis et général à ce problème, de faire le lien avec l'analyse semiclassique « habituelle » et, en définitive, d'atteindre des résultats dans une variété de contextes qui nous a permis d'approfondir l'état des connaissances sur les opérateurs pseudodifférentiels et sur les systèmes de spins.

Nous avons choisi d'utiliser directement des opérateurs de Toeplitz plutôt que de nous fonder sur des équivalences microlocales avec le calcul pseudodifférentiel, pour les raisons suivantes.

1. Différents lemmes techniques, et en particulier les estimées de positivité, sont beaucoup plus simples à énoncer et à démontrer par la quantification de Toeplitz que dans le cas Weyl, au moins quand les données géométriques sous-jacentes (noyau de Szegő ou de Bergman) sont connues a priori.
2. La quantification de Toeplitz est bien définie globalement sur toute variété de Kähler, et les détails techniques associées au recollement de cartes locales sont un inconvénient de la quantification de Weyl (en particulier lorsqu'on veut étudier des effets sous-principaux).
3. Le calcul des termes sous-principaux dans des équivalences entre quantifications, ou des quantifications de symplectomorphismes, est fastidieux. Nous avons préféré comparer des estimées sous-principales des deux côtés pour permettre de retrouver le terme sous-principal du symbole, plutôt que l'inverse.
4. Les techniques développées pour l'analyse asymptotique du noyau de Szegő ou de Bergman, qui est un prérequis pour l'analyse semiclassique en quantification de Toeplitz, permettent d'obtenir ensuite très rapidement des propriétés fonctionnelles des opérateurs de Toeplitz, comme illustré par [Cha03] dans le cas lisse et par notre article [Del18c] dans le cas analytique.
5. Ces asymptotiques de noyaux, que nous avons contribué à rendre plus précises, ont des applications très importantes au-delà du cadre de l'étude des opérateurs de Toeplitz ou pseudodifférentiels, ce qui motive d'autant plus leur étude. Parmi ces applications, on peut citer les propriétés des plongements projectifs des variétés complexes [Tia90 ; Cat99 ; Zel00] et, plus généralement, la géométrie algébrique des fibrés en droites amples [RS16] ; les métriques de Kähler–Einstein [Wan+06 ; Tsu10] ; les matrices normales aléatoires [Kle14] ; les processus déterminantaux [PV05 ; Hou+06 ; Ber08] ; l'échantillonement [BB08 ; BBN11 ; LO12 ; DMN15] ; les ensembles nodaux [SZ99 ; PV05 ; SZ08 ; ZZ10 ; Zel13] ; et même la gravité quantique [FKZ12].

Nous avons étudié la localisation des fonctions propres à basse énergie d'un opérateur de Toeplitz sur une variété fixée et de dimension finie, dans la limite semiclassique. Pour ce faire, nous avons utilisé des résultats déjà connus sur les asymptotiques de noyaux lorsque c'était possible, et démontré des nouveaux résultats sur ces asymptotiques dans les autres cas.

La limite semiclassique correspond à une limite des grands spins pour un système avec un nombre fixé de particules. Nous avons abordé spécifiquement des situations où l'énergie classique est minimale ou bien de manière non dégénérée sur un nombre fini de points, ou bien sur une sous-variété isotrope, ou bien sur l'union transverses de deux variétés isotropes. Nous avons également montré des résultats plus généraux qui s'appliquent par exemple aux systèmes antiferromagnétiques frustrés, où le lieu minimal classique est une variété stratifiée assez compliquée.

Bien que nos résultats donnent un certain éclairage du cas où le nombre de sites croît en même temps que le spin sur chaque site, ils ne s'étendent pas directement à ce cadre. Plus important encore, dans les conditions expérimentales, le spin ne peut pas être raisonnablement considéré comme très grand, car il dépasse rarement $\frac{10}{2}$. Dans la limite d'un grand nombre de particules, la communauté physique justifie l'introduction d'une limite des grands spins, soit par un procédé de renormalisation (en regroupant un ensemble de spins et en les remplaçant par un unique spin plus

grand), soit par des arguments de transition de phase. Dans tous les cas, l'interaction entre limite semiclassique et limite thermodynamique dans les systèmes de spins requiert un examen mathématique à part entière ; la quantification de Toeplitz pourrait permettre de traiter ces problèmes.

Nos résultats en régularité analytique nous permettent d'espérer démontrer une localisation exponentielle dans des contextes plus subtils, par exemple en présence d'effets sous-principaux sur la localisation (une analyse BKW dans le cas Schrödinger minipuits a été réalisée dans [HS86a]). Les constantes diverses qui apparaissent dans notre formulation ne sont pas optimales et la détermination de constantes optimales dans un contexte donné requiert une étude particulière de la géométrie sous-jacente, comme illustré par l'apparition d'une équation de Hamilton-Jacobi dans le cas d'un puits non dégénéré.

5 Contributions détaillées : cas lisse

La première partie de nos travaux, publiée dans [Del16 ; Del17 ; Del18a], est dédiée à l'étude du spectre à basse énergie des opérateurs de Toeplitz à symbole C^∞. En particulier, on étudie les effets sous-principaux sur la localisation des fonctions propres, telle que la *sélection quantique*, qui provoque une concentration de l'état fondamental, et d'autres états à basse énergie, sur une sous-partie de l'ensemble des configurations classiques minimales.

Notre objectif initial était l'extension des résultats connus dans le cas Schrödinger [HS84 ; HS86a] et portant sur la concentration des fonctions propres à basse énergie dans la limite semiclassique, au cadre des opérateurs de Toeplitz, avec applications aux systèmes de spins comme le modèle de Heisenberg antiferromagnétique sur le réseau Kagome. Les articles cités plus haut traitent respectivement du cas d'un potentiel avec plusieurs minima non-dégénérés, et du cas d'un potentiel minimal le long d'une sous-variété d'une manière transversalement non-dégénérée (condition de Morse–Bott). Ce dernier cas a récemment été étendu à des opérateurs de Schrödinger magnétiques [RN15 ; Hel+16] mais n'a pas été étudié pour des opérateurs pseudodifférentiels plus généraux.

5.1 résultats

En utilisant l'asymptotique du noyau de Szegő, nous avons d'abord étudié la sélection quantique dans le cas de puits non-dégénérés.

Définition 5.1. On dit qu'une fonction $h \in C^\infty(M)$ sur une variété de Kähler compacte M *satisfait la condition de puits non dégénérés* lorsque les hypothèses suivantes sont vérifiées :

— $\min(h) = 0$;

— Tout point critique en lequel h s'annulle est non-dégénéré.

Observons que, par définition, les fonctions de Morse dont le minimum est zéro satisfont la condition de puits non dégénérés, de même que le module au carré d'une section holomorphe générique de $L^{\otimes N}$ pour N assez grand. Notons qu'une fonction qui satisfait la condition de puits non dégénérés a un lieu d'annulation fini.

Avant d'énoncer nos résultats principaux, il nous faut définir une notion de concentration de suites de fonctions.

Définition 5.2. Soit Z un fermé de M, et soit

$$V_\delta(N) = \{(m, v) \in X,\ \mathrm{dist}(m, Z) > N^{-\delta}\}.$$

On dit qu'une suite $(u_N)_{N\in\mathbb{N}}$ de fonctions normalisées de $L^2(X)$ se *concentre* sur Z lorsque, pour tout $\delta \in [0, \frac{1}{2})$, on a

$$\|u_N 1_{V_\delta(N)}\|_{L^2(X)} = O(N^{-\infty}).$$

La concentration, au sens de la définition ci-dessus, implique la microlocalisation au sens de Charles [Cha03]. Si une suite u se concentre sur Z alors Z contient son microsupport ; réciproquement, si une suite u a Z pour microsupport, alors u se concentre sur tout voisinage de Z.

Définition 5.3. Si une fonction positive h s'annulle en $P \in M$, la hessienne de h en P, lue dans des coordonnées convenables, est une forme quadratique semi-positive $q(P)$ sur $\mathbb{R}^{2n}$. L'infimum du spectre de $T_1(q(P))$ ne dépend pas du choix de coordonnées ; on définit cette valeur comme $\mu(P)$.

Jusqu'à nouvel ordre, on fixe $h \in C^\infty(M)$ qui satisfait la condition de puits non dégénérés.

Théorème A. *Pour tout $N \in \mathbb{N}$, soit λ_N la première valeur propre de $T_N(h)$, et soit u_N une fonction propre normalisée associée. Alors la suite $(u_N)_{N\in\mathbb{N}}$ se concentre sur les points d'annulation de h en lesquels μ est minimale.*

S'il n'y a qu'un seul tel point P_0, alors il existe une suite réelle $(a_k)_{k\geq 0}$, avec $a_0 = \mu(P_0)$, telle que, pour tout K, on a

$$\lambda_N = N^{-1} \sum_{k=0}^{K} N^{-k} a_k + O(N^{-K-2}).$$

De plus, λ_N est simple pour N assez grand, et il existe $C > 0$ telle que λ_N est la seule valeur propre de $T_N(h)$ dans l'intervalle $[0, N^{-1}(\mu(P_0) + C)]$.

Remarque 5.4. Contrairement aux opérateurs de Schrödinger, la première valeur propre d'un opérateur de Toeplitz peut être dégénérée pour toute valeur de N. Examinons par exemple le cas $M = \mathbb{CP}^1 \simeq \mathbb{S}^2$, avec les fonctions coordonnées x, y, z, et l'opérateur de Toeplitz $T_N(1 - z^2)$. Dans ce cas, l'espace de Hilbert est $\mathbb{C}_N[X]$, et les deux éléments 1 and X^N (qui sont les états cohérents aux pôles Nord et Sud) sont des fonctions propres de cet opérateur, avec valeur propre minimale.

Théorème B. *Soit $C > 0$. Le nombre de valeurs propres de $T_N(h)$ (avec multiplicité) dans l'intervalle $[0, CN^{-1}]$, est uniformément borné lorsque $N \to +\infty$. Plus précisément, pour $C' > C$, soit K et $(b_k)_{1\leq k\leq K}$ tels que*

$$\{b_k,\ k \leq K\} = \bigcup_{\substack{P\in M \\ h(P)=0}} \mathrm{Sp}\,(T_1(q(P))) \cap [0, C']$$

avec multiplicité. Alors on peut trouver $c > 0$ et une liste de réels $(c_k)_{1\leq k\leq K}$ tels que, pour tout k, l'une des valeurs propres de $T_N(h)$ est dans l'intervalle

$$[N^{-1}b_k + N^{-3/2}c_k - cN^{-2}, N^{-1}b_k + N^{-3/2}c_k + cN^{-2}].$$

De plus, il y a au plus K valeurs propres de $T_N(h)$ dans $[0, CN^{-1}]$, et chacune d'entre elles appartient à l'un des intervalles ci-dessus.

Parmi les fonctions lisses qui vérifient la condition de puits non dégénérés, avec un lieu d'annulation prescrit, il y a un ouvert dense de fonctions "non résonantes" telles que, pour tout $k \geq 0$, la k-ième valeur propre de l'opérateur de Toepltiz associé a un développement asymptotique complet en puissances de N^{-1}.

La preuve des théorèmes A et B, qui forme le gros de l'article [Del16], repose d'une part sur une étude détaillée des opérateurs de la forme $T_N(q)$, lorsque q est une forme quadratique définie positive (ou semi-positive) sur $\mathbb{R}^{2n} \simeq \mathbb{C}^n$, et d'autre part sur une construction de fonctions propres approchées associées à une forme faible de l'inégalité de Melin (présentée ci-dessous).

La première partie du théorème A admet une généralisation à une famille très large de fonctions lisses.

Théorème C. *Soit M une variété de Kähler compacte quantifiable et soit $h \in C^\infty(M, \mathbb{R})$, avec $\min(h) = 0$.*

Soit $\mu_{\min} = \min(\mu(x), x \in M, h(x) = 0)$. Alors il existe $C > 0$ et $\epsilon > 0$ tels que, pour tout $N \geq 1$, on a

$$|\min \mathrm{Sp}(T_N(h)) - N^{-1}\mu_{\min}| \leq CN^{-1-\epsilon}.$$

Ici $\mathrm{Sp}(T_N(h))$ désigne le spectre de $T_N(h)$.

De plus, soit $((\lambda_N, u_N))_{N\geq 1}$ une suite de valeurs et fonctions propres de $(T_N(h))_{N\geq 1}$. Si $\|u_N\|_{L^2} = 1$ et $\lambda_N = N^{-1}\mu_{min} + o(N^{-1})$, alors pour tout ouvert U à distance positive de

$$\{x \in M, h(x) = 0, \mu(x) = \mu_{\min}\},$$

lorsque $N \to +\infty$, on a

$$\int_{\pi^{-1}(U)} |u_N|^2 \mathrm{d}Vol = O(N^{-\infty}).$$

Le théorème C repose sur une double inégalité. D'une part, l'inégalité

$$\min Sp(T_N(h)) \leq N^{-1}\mu_{min} + CN^{-1-\epsilon}$$

est démontrée en estimant le quotient de Rayleigh $\langle u, T_N(h)u\rangle$ pour une fonction u bien choisie. D'autre part, l'inégalité

$$\min Sp(T_N(h)) \geq N^{-1}\mu_{min} - CN^{-1-\epsilon},$$

qu'on appelle *inégalité de Melin*, est obtenue par un découpage fin de l'espace des phases.

Lorsque le lieu d'annulation, et le comportement de h et μ, sont simples, on peut donner des résultats plus précis que le théorème C.

Dans le cas particulier d'un symbole qui est minimal d'une manière transversalement non dégénérée sur une variété isotrope (une généralisation géométrique de [HS86a]), nous obtenons un développement complet du premier vecteur propre et du valeur propre associé, en puissances croissantes du paramètre semiclassique.

Théorème D. *Sous les hypothèses du théorème C, supposons que la fonction μ atteint son minimum en un unique point P_0, de manière non dégénérée. Supposons de plus que, sur un voisinage de P_0, l'ensemble $\{h = 0\}$ est une sous-variété isotrope de M, sur laquelle h a une hessienne transverse non dégénérée.*

Alors pour toute suite $(u_N)_{N\geq 1}$ de fonctions propres normalisées correspondant à la premire valeur propre de $T_N(h)$, pour tout $\epsilon > 0$, on a

$$\int_{\left\{dist(\pi(y),P_0)>N^{-\frac{1}{4}+\epsilon}\right\}} |u_N(y)|^2 \mathrm{d}Vol = O(N^{-\infty}).$$

De plus, la première valeur propre est simple et le gap spectral est d'ordre $N^{-\frac{3}{2}}$. La première valeur propre, et le vecteur propre associé, admettent un développement asymptotique complet en puissances de $N^{-\frac{1}{4}}$.

En suivant Helffer–Sjöstrand [HS86a],on appelle *minipuits* pour h un tel point P_0.

Nous traitons aussi le cas le plus simple d'une variété stratifiée non-trivial : un *croisement simple.*

Définition 5.5. Soit $h \in C^\infty(M, \mathbb{R}^+)$ et $P_0 \in M$. On dit que le lieu des zéros de h a un *croisement simple* en P_0 lorsqu'il existe un ouvert U contenant P_0 tel que :

- $\{h = 0\} \cap U = Z_1 \cup Z_2$, où Z_1 et Z_2 sont deux morceaux de sous-variétés isotropes de M.
- $Z_1 \cap Z_2 = \{P_0\}$ et $T_{P_0}Z_1 \cap T_{P_0}Z_2 = \{0\}$.
- $T_{P_0}Z_1 \oplus T_{P_0}Z_2$ est isotrope.
- Pour $i = 1, 2$, sur $Z_i \setminus \{P_0\}$, h s'annulle à l'ordre exactement 2 en Z_i.
- Il existe $c > 0$ tel que, pour tout $x \in Z_1 \cup Z_2$, one a :

$$\mu(x) - \mu(P_0) \geq c\,\mathrm{dist}(P_0, x).$$

La dernière condition dans la définition précédente semble très forte. Cependant, μ est typiquement Lipschitz en P_0, mais pas plus. Un bon exemple est

$$h(q_1, q_2, p_1, p_2) = p_1^2 + p_2^2 + q_1^2 q_2^2,$$

où sur $\{q_1, 0, 0, 0\}$ on a $\mu(q_1) = |q_1| + 1$. Nous excluons délibérément les situations du type $\mu(q_1) = 1 + |q_1| - q_1 + q_1^2$, où μ croît comme $|q_1|$ quand $q_1 < 0$ mais comme q_1^2 pour $q_1 > 0$.

Sous les hypothèses de la définition 5.5, on peut décrire la première valeur propre, et le vecteur propre associé, de $T_N(h)$.

Théorème E. *Sous les hypothèses du théorème C, supposons que la fonction μ est minimale en un unique point P_0 en lequel il y a* croisement simple.

Alors pour toute suite $(u_N)_{N\geq 1}$ de fonctions propres normalisées de $T_N(h)$ correspondant à la première fonction propre, pour tout $\epsilon > 0$, on a

$$\int_{\left\{dist(\pi(y),P_0)>N^{-\frac{1}{3}+\epsilon}\right\}} |u_N(y)|^2 \mathrm{d}Vol = O(N^{-\infty}).$$

De plus, la première valeur propre est simple et le gap spectral est d'ordre $N^{-\frac{4}{3}}$. La première valeur propre, et le vecteur propre associé, admettent un développement asymptotique complet en puissances de $N^{-\frac{1}{6}}$.

Comme dans le cas du théorème D, la première fonction propre est de plus en plus concentrée quand $N \to +\infty$. Notons que la vitesse de convergence, et les puissances de N qui apparaissent dans les développements, sont différentes entre ces deux cas.

Au vu des résultats précédents, on peut se poser la question du problème spectral inverse : étant donné le spectre de $T_N(h)$ à N grand, peut-on « entendre » la géométrie du lieu où μ est minimale ?

Théorème F. *Sous les hypothèses du théorème C, il existe* $0 < c \leq C$, $\epsilon > 0$ *et* $N_0 \geq 0$ *tels que les affirmations suivantes sont vraies. Soit* $\mu_{\min}$ *l'infimum de* μ, *et* $N \geq N_0$.

1. *Toute fonction propre de* $T_N(h)$ *associée à une valeur propre dans la fenêtre spectrale* $[0, \mu_{\min} N^{-1} + \epsilon N^{-1}]$ *est microlocalisée dans un petit voisinage du lieu où* μ *est minimale.*
2. *Pour chaque minipuits avec valeur de Melin* $\mu_{\min}$ *et dimension* r, *pour toute suite* (Λ_N) *telle que*
$$N^{-\frac{1}{2}+\epsilon} \leq \Lambda_N \leq \epsilon,$$
dans la fenêtre spectrale $[0, N^{-1}(\mu_{\min} + \Lambda_N)]$, *le nombre de quasi fonctions propres de* $T_N(h)$ *supportées sur un petit voisinage du minipuits, appartient à l'intervalle*
$$\left[c(N^{\frac{1}{2}}\Lambda_N)^r, C(N^{\frac{1}{2}}\Lambda_N)^r\right].$$
3. *Pour chaque point de croisement simple avec valeur de Melin* $\mu_{\min}$ *et dimensions* (r, r), *pour toute suite* (Λ_N) *vérifiant*
$$N^{-\frac{1}{3}+\epsilon} \leq \Lambda_N \leq \epsilon,$$
dans la fenêtre spectrale $[0, N^{-1}(\mu_{\min} + \Lambda_N)]$, *le nombre de quasi fonctions propres de* $T_N(h)$ *supportées sur un petit voisinage du point de croisement, appartient à l'intervalle*
$$\left[c(N^{\frac{1}{3}}\Lambda_N)^{\frac{3r}{2}} \log(N^{\frac{1}{3}}\Lambda_N), C(N^{\frac{1}{3}}\Lambda_N)^{\frac{3r}{2}} \log(N^{\frac{1}{3}}\Lambda_N)\right].$$

Dans le théorème F, le cas 1 est une généralisation du théorème C. Les cas 2 et 3 s'appliquent respectivement aux situations des théorèmes D et E.

Remarque 5.6. Si $\Lambda_N < N^{-\epsilon}$, alors il y a plus de valeurs propres liées à un minipuits qu'à un point de croisement (le rapport est d'ordre $N^{\frac{\epsilon}{2}}$). Si on se restreint à cette fenêtre spectrale, alors un minipuits de dimension r « cache » non seulement des minipuits de dimension moindre, mais aussi des points de croisement de dimension inférieure à (r, r).

Si $\Lambda_N > \frac{\epsilon}{2}$, alors il y a plus de valeurs propres liées à un point de croisement qu'à un minipuits (le rapport est d'ordre $\log(N)$). Dans ces fenêtres, les points de croisement cachent les minipuits de dimension inférieure.

En particulier, la donnée du spectre permet non seulement de recouvrer la valeur de $\mu_{\min}$, mais aussi de déterminer les plus grandes dimensions des minipuits ou des points de croisement qui réalisent $\mu_{\min}$, et de déterminer s'il y a seulement des minipuits de cette dimension, seulement des points de croisement, ou les deux.

Le théorème F permet aussi d'étudier les états thermiques (à basse température) dans un système pour lequel il y a compétition entre un minipuits et un point de croisement qui ont le même μ. On voit alors une transition : dans des gammes de températures d'ordre N^{-1}, la mesure de Gibbs se concentre sur le point de croisement ; dans des gammes de température d'ordre $N^{-1-\epsilon}$, cette mesure se concentre sur les points réguliers.

5.2 discussion

Pour pouvoir obtenir les théorèmes D et E, nous construisons une forme normale symplectique dans chaque cas, de manière à diagonaliser partiellement la hessienne transverse. Le problème est alors réduit à un opérateur confinant effectif sur les modes lents, dans l'esprit de l'approximation de Born–Oppenheimer.

Nous formulons nos résultats dans le contexte Kähler ou presque Kähler. Comme nous utilisons peu de propriétés spécifiques à ces cas en-dehors du développement du noyau de Szegő, ces travaux s'étendent aux généralisations diverses des opérateurs de Toeplitz. Ceci requiert uniquement une petite modification dans la définition de la fonction μ, pour laquelle le nouvel espace de Bargmann modèle doit être pris dans des coordonnées qui préservent la métrique infinitésimale, mais qui est compatible au point considéré avec la connexion de départ (autrement dit, le poids quadratique $e^{-N|z|^2}$ devient $e^{-NQ(z)}$ où Q est une forme quadratique bien choisie).

Des résultats généraux [Cha03] donnent une équivalence microlocale entre quanatification de Weyl et de Toeplitz, au prix d'un changement de symbole qui est déjà non-trivial au niveau sous-principal. Cette équivalence microlocale ne peut pas être globalisée sans entrer dans des détails techniques. De plus, nous énonçons nos résultats avec un degré de généralité jamais atteint pour des opérateurs pseudo-différentiels, comme par exemple une généralisation de la situation « minipuits », qui avait seulement été traitée pour les opérateurs de Schrödinger (éventuellement magnétiques). Ce fait, et l'estimée de positivité très simple pour les opérateurs de Toeplitz ($f \geq 0 \Rightarrow T_N(f) \geq 0$), nous ont encouragés à utiliser pleinement le formalisme Toeplitz (nous utilisons la quantification de Weyl uniquement pour traiter l'opérateur effectif dans les formes normales pour les théorèmes D et E), avec un avantage supplémentaire : la microlocalisation est bien plus facile à définir et à étudier dans le contexte Toeplitz.

Dans le cas Schrödinger [HS84 ; HS86a], les auteurs obtiennent une décroissance exponentielle des fonctions propres dans les variables d'espace. Pour les opérateurs de Toeplitz, de même que pour les opérateurs pseudo-différentiels plus généraux, ce type de résultats nécessite des hypothèses de régularité analytique, que nous traitons dans [Del18c ; Del19].

6 Contributions détaillées : cas analytique

Dans la seconde partie de nos travaux [Del18b ; Del18c ; Del19], nous étudions les opérateurs de Toeplitz et le noyau de Bergman sous des hypothèses de régularité analytique. Notre motivation principale est l'obtention d'estimées exponentielles sur la concentration des fonctions propres.

Nous étudions d'abord le cas simple d'une variété compacte de courbure sectionnelle constante (ou d'un produit cartésien de telles variétés).

Définition 6.1 (Une section particulière de $L^{\otimes N} \boxtimes \overline{L}^{\otimes N}$)**.** Soit (M, ω, J) une variété de Kähler analytique. Le fibré $L \boxtimes \overline{L}$, restreint à la diagonale $M_\Delta = \{(x, y) \in M \times M, x = y\}$, est le fibré trivial $M \times \mathbb{C} \to M$. De plus, si la première composante de $M \times M$ est munie de la structure complexe de M, et la seconde composante de la structure complexe opposée (on note informellement $M \times \overline{M}$ la variété complexe produit), alors M_Δ est une sous-variété totalement réelle de $M \times \overline{M}$.

Sur un petit voisinage de M_Δ dans $M \times M$, on définit alors Ψ^1 comme l'unique section holomorphe de $L \boxtimes \overline{L}$ qui est égale à 1 sur M_Δ.

Cette section admet la description locale suivante : soit s une section holomorphe de L qui ne s'annulle pas sur un ouvert $U \subset M$. Soit $\phi = -\frac{1}{2} \log |s|_h$. Alors ϕ is analytique, donc admet une extension holomorphe $\widetilde{\phi}$, sur $U \times \overline{U}$ (à nouveau, la copie diagonale de U est totalement réelle dans $U \times \overline{U}$). Alors

$$\Psi^1(x, y) = e^{2\widetilde{\phi}(x,y)} s(x) \otimes \overline{s(y)}.$$

On définit alors $\Psi^N = (\Psi^1)^{\otimes N}$, qui est une section de $L^{\otimes N} \boxtimes \overline{L}^{\otimes N}$.

Théorème G. *Soit M une variété de Kähler quantifiable de dimension complexe d et supposons que M est un produit de variétés de Kähler compactes de courbure sectionnelle constante.*

Alors le projecteur de Bergman S_N sur M admet un noyau approché : il existe une famille de coefficients réels $(a_i)_{0 \leq i \leq d}$ et des constantes strictement positives c, C telles que pour tout $(x, y) \in M \times M$ et pour tout $N \geq 1$, on a

$$\left\| S_N(x, y) - \Psi^N(x, y) \sum_{k=0}^{d} N^{d-k} a_k \right\|_h \leq C e^{-cN}.$$

Si M a courbure sectionnelle constante κ, alors de plus

$$\sum_{k=0}^{d} N^{d-k} a_k = \frac{1}{\pi^d} (N - \kappa)(N - 2\kappa) \dots (N - d\kappa).$$

La généralisation du théorème G au cas d'une variété analytique quelconque nécessite l'introduction de nouvelles classes de symboles, étudiées dans [Del18c].

Définition 6.2. Soit X une variété analytique compacte (éventuellement à bord).

Soient r, R, m des réels strictement positifs. L'espace des symboles analytiques $S_m^{r,R}(X)$ est constitué des suites $(a_k)_{k \geq 0}$ de fonctions analytiques sur X telles qu'il existe $C \geq 0$ vérifiant, pour tous $j \geq 0, k \geq 0$,

$$\|a_k\|_{C^j(X)} \leq C \frac{r^j R^k (j + k)!}{(j + k + 1)^m}.$$

La norme d'un élément $a \in S_m^{r,R}(X)$ est définie comme le plus petit C vérifiant la famille d'inégalités ci-dessus. Ainsi, $S_m^{r,R}(X)$ est un espace de Banach.

En utilisant ces classes analytiques, nous construisons des formules asymptotiques pour le projecteur de Bergman et les opérateurs de Berezin–Toeplitz sur une variété de Kähler compacte. Nous montrons que le noyau de Bergman admet un développement asymptotique en puissances décroissantes de N, à une erreur $O(e^{-cN})$ près (avec $c > 0$), dès que la variété de Kähler est analytique.

Théorème H. *Soit M une variété de Kähler quantifiable, analytique, compacte, de dimension complexe d. Il existe des réels strictement positifs r, R, m, c, c', C, un voisinage U de la diagonale dans $M \times M$, et un symbole analytique $a \in S_m^{r,R}(U)$, holomorphe dans la première variable, anti-holomorphe dans la seconde variable, tels que le noyau de Bergman S_N sur M satisfait, pour tous $x, y \in M \times M$ etx $N \geq 1$:*

$$\left\| S_N(x,y) - \Psi^N(x,y) \sum_{k=0}^{cN} N^{d-k} a_k(x,y) \right\|_{h^{\otimes N}} \leq Ce^{-c'N}.$$

Ce théorème est obtenu comme sous-produit d'un théorème de composition et d'inversion d'opérateurs de Toeplitz *covariants*.

Définition 6.3. Soit U un petit voisinage ouvert de la diagonale de $M \times M$; par exemple $U = \{(x,y) \in M \times M, \mathrm{dist}(x,y) < \epsilon\}$ avec ϵ suffisamment petit pour que la section Ψ^N de la définition 6.1 soit définie sur U. L'espace $T_m^{-,r,R}(U)$ des *opérateurs de Toeplitz covariants analytiques* est constitué des opérateurs à noyau de la forme

$$T_N^{cov}(f) : (x,y) \mapsto N^d \mathbb{1}_{(x,y)\in U} \Psi^N(x,y) f(N)(x,y),$$

où $f(N)$ est la sommation d'un symbole analytique $f \in S_m^{r,R}(U)$, avec f holomorphe en la première variable et anti-holomorphe en la seconde variable.

Théorème I. *Soit M une variété de Kähler analytique, compacte, quantifiable, Soient f et g des symboles analytiques sur un voisinage U de la diagonale dans $M \times M$, holomorpes en la première variable et anti-holomorphes en la seconde variable.*

Alors il existe $c' > 0$ et un symbole analytique $f \sharp g$ sur U, holomorphe en la première variable et anti-holomorphe en la seconde variable, tels que

$$T_N^{cov}(f) T_N^{cov}(g) = T_N^{cov}(f \sharp g) + O(e^{-c'N}).$$

Pour tous r, R, m assez grand, le produit $\sharp$ est une application bilinéaire continue de $S_m^{r,R}(U) \times S_m^{2r,2R}(U)$ vers $S_m^{2r,2R}(U)$; la constante c' dépend seulement de r, R, m.

Si le symbole principal de f ne s'annulle pas sur M alors il existe un symbole analytique $f^{\sharp -1}$ tel que, pour tout $c' > 0$, one ait

$$T_N^{cov}(f) T_N^{cov}(f^{\sharp -1}) = S_N + O(e^{-c'N}).$$

Étant donné un symbole analytique $f \in S_{m_0}^{r_0,R_0}(U)$ dont le symbole principal ne s'annulle pas, il existe $C > 0$ tel que, pour tous r, R, m assez grands (dépendants de f, r_0, R_0, m_0), on a

$$\|f^{\sharp -1}\|_{S_m^{r,R}(U)} \leq C \|f\|_{S_m^{r,R}(U)}.$$

Cette étude du calcul des opérateurs de Toeplitz nous permet d'énoncer des résultats concernant des suites de fonctions propres d'opérateurs de Toeplitz $(T_N(f))_{N\geq 1}$ pour f analytique. Nous prouvons le résultat suivant.

Théorème J. *Soit M une variété de Kähler analytique, quantifiable, compacte. Soit f une fonction analytique sur M à valeurs réelles et soit $E \in \mathbb{R}$. Soit $(u_N)_{N\geq 1}$ une suite de fonctions propres normalisées de $T_N(f)$, avec valeur propre $(\lambda_N)_{N\geq 1}$ vérifiant $\lambda_N \underset{N\to+\infty}{\to} E$. Alors, pour tout V à distance strictement positive de $\{f = E\}$, il existe des réels strictement positifs c, C tels que, pour tout $N \geq 1$, on a*

$$\int_V \|u_N(x)\|_h^2 \frac{\omega^{\wedge n}}{n!}(dx) \leq Ce^{-cN}.$$

On dit que $(u_N)_{N\in\mathbb{N}}$ a un *taux de décroissance exponentiel* dans V.

Nous étudions ensuite, dans le cas particulier où f atteint un minimum de manière non-dégénérée, une construction de fonctions propres approchées sous la forme de l'ansatz de Brillouin–Kramers–Wentzel (BKW).

Théorème K. *Soit M une variété de Kähler analytique, quantifiable, compacte. Soit f une fonction analytique sur M à valeurs réelles, avec* $\min(f) = 0$.

1. *Soit $P_0 \in M$ un minimum non-dégénéré de f. Alors il existe*
   - *des réels strictement positifs c, c', R,*
   - *un voisinage V de P_0,*
   - *une fonction holomorphe φ sur V telle que $|\varphi(x)| \leq \frac{d(x,P_0)^2}{2}$,*
   - *une suite de fonctions holomorphes $(u_k)_{k\geq 0}$ sur V, avec*

$$\begin{aligned} u_0(P_0) &= 1 \\ u_k(P_0) &= 0 \qquad\qquad \text{for } k \neq 0, \end{aligned}$$

   - *une suite réelle $(\lambda_k)_{k\geq 0}$, où λ_0 est l'énergie fondamentale de $T_N(\mathrm{Hess}(f)(P_0))$*

   telles que, en notant $\psi^N_{P_0}$ l'état cohérent en P_0, alors avec

$$u(N) = \psi^N_{P_0} e^{N\varphi} \left(\sum_{k=0}^{cN} N^{-k} u_k \right),$$

   on a

$$\left\| T_N(f)u(N) - N^{-1} \left(\sum_{k=0}^{cN} N^{-k} \lambda_k \right) u(N) \right\|_{L^2(M, L^{\otimes N})} \leq Ce^{-c'N},$$

   et

$$\begin{aligned} |\lambda_k| &\leq CR^k k! \\ \sup_U |u_k| &\leq CR^k k!, \end{aligned}$$

2. *Si le lieu minimal de f est constitué d'un nombre fini de minima non dégénérés, alors toute fonction propre de $T_N(f)$ avec valeur propre minimale est exponentiellement proche d'une combinaison linéaire des fonctions construites en l'item 1 en chaque point minimal.*

Comme $T_N(f)$ est auto-adjoint, l'existence d'une fonction propre approchée implique automatiquement que $\lambda(N)$ est exponentiellement proche du spectre de $T_N(f)$, mais pas nécessairement que $u(N)$ est exponentiellement proche d'une fonction propre.

6.1 Estimées exponentielles en analyse semiclassique

Les fonctions propres exactes ou approchées des hamiltoniens quantiques sont souvent cherchées sous la forme d'un ansatz BKW :

$$e^{\frac{\phi(x)}{\hbar}} (a_0(x) + \hbar a_1(x) + \hbar^2 a_2(x) + \ldots),$$

où $\hbar$ est le paramètre semiclassique. Dans la formule ci-dessus, $\Re(\phi) \leq 0$, de sorte que cette expression est extrêmement petite hors de l'ensemble $\{\Re(\phi) = 0\}$, où la fonction se concentre.

Cette intuition a engendré un intérêt pour les taux de décroissance des solutions d'EDP à petit paramètre. Le cadre le plus utilisé dans le traitemnt mathématique de la mécanique quantique est le calcul de Weyl des opérateurs pseudodifférentiels [Zwo12]. Les taux de décroissance typique dans ce cadre sont d'ordre $O(\hbar^\infty)$. En effet, la composition de deux opérateurs pseudodifférentiels (ou plus généralement, de deux Opérateurs Intégraux de Fourier) associés à des symboles lisses admet un développement en puissances de $\hbar$ seulement à une erreur $O(\hbar^\infty)$.

Dans le cas particulier d'un opérateur de Schrödinger de la forme $P_\hbar = -\hbar^2\Delta + V$, où V est une fonction lisse, on peut obtenir des *estimées d'Agmon* [HS84] pour des fonctions propres de $P_\hbar$ avec valeur propre près de E. Ces contrôles sont de la forme

$$|f_\hbar(x)| \leq C\hbar^{-d} e^{-\frac{\phi(x)}{\hbar}},$$

avec $\phi > 0$ là où $V > E$.

On peut facilement conjuguer un opérateur de Schrödinger avec un opérateur de multiplication de la forme $e^{-\frac{\phi}{\hbar}}$, ce qui permet de démontrer le contrôle ci-dessus. Cette propriété de conjugaison n'est plus vraie pour des opérateurs pseudodifférentiels plus généraux. De plus, les estimées d'Agmon donnent une décroissance exponentielle dans les variables d'espace et ne donnent aucune information sur le taux de concentration de la transformée de Fourier semiclassique, dont on ne sait qu'elle décroît loin de zéro qu'à vitesse $O(\hbar^\infty)$.

Dans le cadre des opérateurs pseudodifférentiels sur $\mathbb{R}^d$ à symbole *analytique*, des taux de décroissance exponentiels dans l'espace des phases (c'est-à-dire, décroissance exponentielle de la transformée de FBI ou de Bargmann) ont été obtenus dans [Mar92 ; Mar94a ; Mar94b ; MS99], en suivant les techniques analytiques microlocales [Sjö82]. Les estimées exponentielles en analyse semiclassique ont des applications cruciales en physique [CG88] où elles donnent une validité à l'utilisation de l'ansatz BKW, qui à son tour donne des résultats précis sur les gaps spectraux ou la dynamique des états quantiques (effet tunnel). Par ailleurs, en mathématiques, ces techniques peuvent être utilisées pour étudier des perturbations non auto-adjointes [HS04 ; HS08] et des résonances [HS86b ; Sjö90 ; MS01 ; Sjö03 ; Fau06].

Puisque la décroissance exponentielle dans l'espace des phases pour les opérateurs pseudodifférentiels est mesurée par la transformée de FBI ou de Bargmann, il paraît naturel de formuler ces questions en termes de quantification de Bargmann, que la quantification de Berezin–Toeplitz généralise aux variétés de Kähler. Cependant, par exemple, la validité de l'ansatz BKW en fond de puits pour un opérateur de Toeplitz à symbole analytique n'a été démontrée que lorsque la variété sous-jacente est $\mathbb{C}$ (voir [Vor89]), et quelques résultats ont été obtenus récemment concernant des perturbations non auto-adjointes d'opérateurs de Toeplitz sur des tores complexes de dimension 1 [Rou17].

L'analyse des opérateurs de Toeplitz dépend de la connaissance du projecteur de Bergman. Les techniques microlocales originellement utilisées pour l'étude de ce projecteur [BS75 ; Zel00 ; Cha03] permettent un contrôle du noyau de Bergman à $O(N^{-\infty})$ près, ce dont on déduit des estimées $O(N^{-\infty})$ pour la composition et les vecteurs et valeurs propres des opérateurs de Toeplitz à symbole lisse ([LF14b ;

Del16 ; Del17]). En se fondant sur des techniques pseudodifférentielles analytiques, les *noyaux de Bergman partiels* permettent de démontrer, sous une hypothèse d'analyticité, une décroissance exponentielle (c'est-à-dire, $O(e^{-cN})$) des états cohérents en quantification de Toeplitz [BBS08]. Plus récemment, cette méthode a été utilisée pour démontrer un contrôle $O(e^{-c\sqrt{N}})$ du noyau de Bergman sous les mêmes hypothèses [HLX17]. Un autre article récent [Kor18] établit un taux de décroissance $O(e^{-c\sqrt{N}})$ dans la zone interdite pour les fonctions propres d'opérateurs de Toeplitz à symboles lisses.

Pour démontrer le théorème I, nous avons crucialement besoin d'une condition de "bon équilibre" dans les développements de la phase stationnaire, correspondant aux règles de quantification (anti-)Wick pour les symboles covariants ou contravariants en quantification de Toeplitz. Cette information particulière nous permet de borner des quotients non-triviaux de factorielles qui apparaissent dans les termes successifs de la phase stationnaire.

Les opérateurs pseudodifférentiels, dans le contexte desquels les estimées exponentielles ont été étudiées à l'origine, satisfont aussi une condition de "bon équilibre" : dans le terme d'ordre k de la composition de deux symboles f et g (qui est, a priori, un opérateur bidifférentiel en f et g d'ordre total $2k$), chaque symbole est dérivé au plus k fois. Nous pensons que les techniques développées dans cette partie peuvent être étendues à des Opérateurs Intégraux de Fourier "bien équilibrés" plus généraux en régularité analytique. Cette méthode est relativement élémentaire en ce que le seul élément technique consiste en des estimées combinatoires sur des quotients de factorielles et de puissances.

Notre méthode jette un nouvel éclairage sur la difficulté de formuler des équivalences entre quantifications en régularité analytique qui soient sans perte de régularité. Ce fait a peu d'importance lorsqu'on s'intéresse, par exemple, à la théorie spectrale ; mais des résultats précis (sans perte de régularité) concernant la composition et l'inversion dans une classe analytique donnée, tels que le théorème I, ne peuvent pas être transférés d'une quantification à une autre s'il y a une perte de régularité intermédiaire.

Une motivation particulière pour nos travaux est la quantification sur $M = (\mathbb{S}^2)^d$ des polynômes en les coordonnées (pour l'immersion standard de $\mathbb{S}^2$ dans $\mathbb{R}^3$). Les opérateurs obtenus sont les opérateurs de spin, avec spin total $\frac{N}{2}$. L'effet tunnel dans les systèmes de spins, dans la limite des grands spins, est largement étudié en physique (voir [OP15] pour un panorama). Cette partie de nos travaux a également pour objet de donner un fondement mathématique à cette étude.

Références

[BB08] Robert Berman et Sebastien Boucksom. "Equidistribution of Fekete Points on Complex Manifolds". In : *arXiv preprint arXiv :0807.0035* (2008).

[BBN11] Robert Berman, Sébastien Boucksom et David Witt Nyström. "Fekete Points and Convergence towards Equilibrium Measures on Complex Manifolds". In : *Acta Mathematica* 207.1 (2011), p. 1-27.

[BBS08] Robert Berman, Bo Berndtsson et Johannes Sjöstrand. “A Direct Approach to Bergman Kernel Asymptotics for Positive Line Bundles”. In : *Arkiv för Matematik* 46.2 (2008), p. 197-217.

[BG81] Louis Boutet de Monvel et Victor Guillemin. *The Spectral Theory of Toeplitz Operators*. Annals of Mathematics Studies 99. Princeton University Press, 1981.

[BK52] Theodore H. Berlin et Mark Kac. “The Spherical Model of a Ferromagnet”. In : *Physical Review* 86.6 (1952), p. 821.

[BK67] Louis Boutet de Monvel et Paul Krée. “Pseudo-Differential Operators and Gevrey Classes”. In : *Annales de l'Institut Fourier* 17.1 (1967), p. 295-323.

[BS75] Louis Boutet de Monvel et Johannes Sjöstrand. “Sur la singularité des noyaux de Bergman et de Szegö”. In : *Journées équations aux dérivées partielles* 34-35 (1975), p. 123-164.

[BU96] David Borthwick et Alejandro Uribe. “Almost Complex Structures and Geometric Quantization”. In : *arXiv preprint dg-ga/9608006* (1996).

[Ber08] Robert Berman. “Determinantal Point Processes and Fermions on Complex Manifolds : Bulk Universality”. In : *Algebraic and Analytic Microlocal Analysis* To appear (2008).

[Ber75] Feliks A. Berezin. “General Concept of Quantization”. In : *Communications in Mathematical Physics* 40.2 (1975), p. 153-174.

[CG88] Eugene M. Chudnovsky et Leon Gunther. “Quantum Tunneling of Magnetization in Small Ferromagnetic Particles”. In : *Physical review letters* 60.8 (1988), p. 661.

[Cat99] David Catlin. “The Bergman Kernel and a Theorem of Tian”. In : *Analysis and Geometry in Several Complex Variables*. Sous la dir. de Gen Komatsu et Masatake Kuranishi. Trends in Mathematics. Birkhäuser Boston, 1999, p. 1-23.

[Cha03] Laurent Charles. “Berezin-Toeplitz Operators, a Semi-Classical Approach”. In : *Communications in Mathematical Physics* 239.1-2 (août 2003), p. 1-28.

[Chr13] Michael Christ. “Upper Bounds for Bergman Kernels Associated to Positive Line Bundles with Smooth Hermitian Metrics”. In : *arXiv :1308.0062 [math]* (juil. 2013).

[Chu92] Andrey Chubukov. “Order from Disorder in a Kagome Antiferromagnet”. In : *Physical Review Letters* 69.5 (août 1992), p. 832-835.

[DMN15] Tien-Cuong Dinh, Xiaonan Ma et Viet-Anh Nguyen. “Equidistribution Speed for Fekete Points Associated with an Ample Line Bundle”. In : *Annales de l'ÉNS (to appear)* (2015).

[DMS12] Stefan Depenbrock, Ian P. McCulloch et Ulrich Schollwöck. “Nature of the Spin-Liquid Ground State of the S=1/2 Heisenberg Model on the Kagome Lattice”. In : *Physical review letters* 109.6 (2012), p. 067201.

[DS98] Benoît Douçot et Patrice Simon. “A Semiclassical Analysis of Order from Disorder”. In : *Journal of Physics A : Mathematical and General* 31.28 (1998), p. 5855.

[Del16] Alix Deleporte. “Low-Energy Spectrum of Toeplitz Operators : The Case of Wells”. In : *Journal of Spectral Theory (accepted)* (2016).

[Del17] Alix Deleporte. “Low-Energy Spectrum of Toeplitz Operators with a Miniwell”. In : *arXiv* 1610.05902 (2017).

[Del18a] Alix Deleporte. “Quantum Selection for Spin Systems”. In : *arXiv* 1808.00718 (2018).

[Del18b] Alix Deleporte. “The Bergman Kernel in Constant Curvature”. In : *arXiv* 1812.06648 (2018).

[Del18c] Alix Deleporte. “Toeplitz Operators with Analytic Symbols”. In : *arXiv* 1812.07202 (2018).

[Del19] Alix Deleporte. “WKB Eigenmode Construction for Analytic Toeplitz Operators”. In : *arXiv* 1901.07215 (2019).

[FKZ12] Frank Ferrari, Semyon Klevtsov et Steve Zelditch. “Gravitational Actions in Two Dimensions and the Mabuchi Functional”. In : *Nuclear Physics B* 859.3 (2012), p. 341-369.

[Fau06] Frédéric Faure. “Prequantum Chaos : Resonances of the Prequantum Cat Map”. In : *arXiv :nlin/0606063* (juin 2006).

[Fu+15] Mingxuan Fu et al. “Evidence for a Gapped Spin-Liquid Ground State in a Kagome Heisenberg Antiferromagnet”. In : *Science* 350.6261 (nov. 2015), p. 655-658.

[GU88] Victor Guillemin et Alejandro Uribe. “The Laplace Operator on the Nth Tensor Power of a Line Bundle : Eigenvalues Which Are Uniformly Bounded in N”. In : *Asymptotic Analysis* 1.2 (jan. 1988), p. 105-113.

[Gou25] Samuel Goudsmit. “Über Die Komplexstruktur Der Spektren”. In : *Zeitschrift für Physik* 32 (1925).

[HLX17] Hamid Hezari, Zhiqin Lu et Hang Xu. “Off-Diagonal Asymptotic Properties of Bergman Kernels Associated to Analytic Kähler Potentials”. In : *arXiv preprint arXiv :1705.09281* (2017).

[HS04] Michael Hitrik et Johannes Sjöstrand. “Non-Selfadjoint Perturbations of Selfadjoint Operators in 2 Dimensions I”. In : *Annales Henri Poincaré* 5.1 (fév. 2004), p. 1-73.

[HS08] Michael Hitrik et Johannes Sjöstrand. “Rational Invariant Tori, Phase Space Tunneling, and Spectra for Non-Selfadjoint Operators in Dimension 2”. In : *Annales Scientifiques de l’ÉNS.* T. 41. 2008, p. 513-573.

[HS84] Bernard Helffer et Johannes Sjöstrand. “Multiple Wells in the Semi-Classical Limit I”. In : *Communications in Partial Differential Equations* 9.4 (1984), p. 337-408.

[HS86a] Bernard Helffer et Johannes Sjöstrand. “Puits Multiples En Limite Semi-Classique V : Étude Des Minipuits”. In : *Current topics in partial differential equations* (1986), p. 133-186.

[HS86b] Bernard Helffer et Johannes Sjöstrand. “Résonances En Limite Semi-Classique”. In : *Mémoires de la Société Mathématique de France* 24 (1986), p. 1-228.

[HX18] Hamid Hezari et Hang Xu. “Quantitative Upper Bounds for Bergman Kernels Associated to Smooth Kähler Potentials”. In : *arXiv :1807.00204 [math]* (juin 2018).

[Han+16] Tian-Heng Han et al. “Correlated Impurities and Intrinsic Spin-Liquid Physics in the Kagome Material Herbertsmithite”. In : *Physical Review B* 94.6 (2016), p. 060409.

[Har+97] Mark J. Harris et al. “Geometrical Frustration in the Ferromagnetic Pyrochlore Ho2Ti2O7”. In : *Physical Review Letters* 79.13 (1997), p. 2554.

[Hel+16] Bernard Helffer et al. “Magnetic Wells in Dimension Three”. In : *Analysis & PDE* 9.7 (nov. 2016), p. 1575-1608.

[Hou+06] J. Ben Hough et al. “Determinantal Processes and Independence”. In : *Probability surveys* 3 (2006), p. 206-229.

[IPB14] Yasir Iqbal, Didier Poilblanc et Federico Becca. “Vanishing Spin Gap in a Competing Spin-Liquid Phase in the Kagome Heisenberg Antiferromagnet”. In : *Physical Review B* 89.2 (2014), p. 020407.

[Iqb+13] Yasir Iqbal et al. “Gapless Spin-Liquid Phase in the Kagome Spin-1 2 Heisenberg Antiferromagnet”. In : *Physical Review B* 87.6 (2013), p. 060405.

[Kle14] Semyon Klevtsov. “Random Normal Matrices, Bergman Kernel and Projective Embeddings”. In : *Journal of High Energy Physics* 2014.1 (2014), p. 133.

[Kor18] Yuri A. Kordyukov. “Semiclassical Spectral Analysis of Toeplitz Operators on Symplectic Manifolds : The Case of Discrete Wells”. In : *arXiv :1809.06799 [math]* (sept. 2018).

[LF14a] Yohann Le Floch. “Singular Bohr–Sommerfeld Conditions for 1D Toeplitz Operators : Elliptic Case”. In : *Communications in Partial Differential Equations* 39.2 (2014), p. 213-243.

[LF14b] Yohann Le Floch. “Théorie Spectrale Inverse Pour Les Opérateurs de Toeplitz 1D”. Thèse de doct. Rennes 1, 2014.

[LNK18] Chih-Yuan Lee, Bruce Normand et Yingjer Kao. “Gapless Spin Liquid in the Kagome Heisenberg Antiferromagnet with Dzyaloshinskii-Moriya Interactions”. In : *arXiv preprint arXiv :1809.09128* (2018).

[LO12] Nir Lev et Joaquim Ortega-Cerdà. “Equidistribution Estimates for Fekete Points on Complex Manifolds”. In : *Journal of the European Mathematical Society* 18.2 (2012), p. 425-464.

[Lag+10] Jorge Lago et al. “CdEr2Se4 : A New Erbium Spin Ice System in a Spinel Structure”. In : *Physical review letters* 104.24 (2010), p. 247203.

[MM02] Xiaonan Ma et George Marinescu. “The Spin-c Dirac Operator on High Tensor Powers of a Line Bundle”. In : *Mathematische Zeitschrift* 240.3 (2002), p. 651-664.

[MM07] Xiaonan Ma et George Marinescu. *Holomorphic Morse Inequalities and Bergman Kernels*. T. 254. Springer Science & Business Media, 2007.

[MS01] Anders Melin et Johannes Sjöstrand. "Bohr-Sommerfeld Quantization Condition for Non-Selfadjoint Operators in Dimension 2". In : *arXiv :math/0111293* (nov. 2001).

[MS75] Anders Melin et Johannes Sjöstrand. "Fourier Integral Operators with Complex-Valued Phase Functions". In : *Fourier Integral Operators and Partial Differential Equations*. Springer, 1975, p. 120-223.

[MS99] André Martinez et Vania Sordoni. "Microlocal WKB Expansions". In : *Journal of functional analysis* 168.2 (1999), p. 380-402.

[Mar92] André Martinez. "Estimations Sur l'effet Tunnel Microlocal". In : *Séminaire Équations aux dérivées partielles (Polytechnique)* 1991 (1992), p. 1-10.

[Mar94a] André Martinez. "Estimates on Complex Interactions in Phase Space". In : *Mathematische Nachrichten* 167.1 (1994), p. 203-254.

[Mar94b] André Martinez. "Precise Exponential Estimates in Adiabatic Theory". In : *Journal of Mathematical Physics* 35.8 (1994), p. 3889-3915.

[Mat+02] Kazuyuki Matsuhira et al. "Low-Temperature Magnetic Properties of Pyrochlore Stannates". In : *Journal of the Physical Society of Japan* 71.6 (juin 2002), p. 1576-1582.

[Mel71] Anders Melin. "Lower Bounds for Pseudo-Differential Operators". In : *Arkiv för Matematik* 9.1 (1971), p. 117-140.

[OP15] S. A. Owerre et M. B. Paranjape. "Macroscopic Quantum Tunneling and Quantum-Classical Phase Transitions of the Escape Rate in Large Spin Systems". In : *Physics Reports* 546 (jan. 2015), p. 1-60.

[PV05] Yuval Peres et Bálint Virág. "Zeros of the Iid Gaussian Power Series : A Conformally Invariant Determinantal Process". In : *Acta Mathematica* 194.1 (2005), p. 1-35.

[RB93] Jan N. Reimers et A. John Berlinsky. "Order by Disorder in the Classical Heisenberg Kagome Antiferromagnet". In : *Physical Review B* 48.13 (oct. 1993), p. 9539-9554.

[RN15] Nicolas Raymond et San Vũ Ngọc. "Geometry and Spectrum in 2D Magnetic Wells". In : *Annales de l'Institut Fourier* 65 (2015), p. 137-169.

[RS16] Julius Ross et Michael Singer. "Asymptotics of Partial Density Functions for Divisors". In : *The Journal of Geometric Analysis* (sept. 2016), p. 1-52.

[RSN18] Ophélie Rouby, Johannes Sjöstrand et San Vũ Ngọc. "Analytic Bergman Operators in the Semiclassical Limit". In : *hal-01851770* (juil. 2018).

[Rou17] Ophélie Rouby. "Bohr–Sommerfeld Quantization Conditions for Nonselfadjoint Perturbations of Selfadjoint Operators in Dimension One". In : *International Mathematics Research Notices* (2017).

[SZ02] Bernard Shiffman et Steve Zelditch. “Asymptotics of Almost Holomorphic Sections on Symplectic Manifolds”. In : *J. reine angew. Math.* 544 (2002), p. 181-222.

[SZ08] Bernard Shiffman et Steve Zelditch. “Number Variance of Random Zeros on Complex Manifolds”. In : *Geometric and Functional Analysis* 18.4 (2008), p. 1422-1475.

[SZ99] Bernard Shiffman et Steve Zelditch. “Distribution of Zeros of Random and Quantum Chaotic Sections of Positive Line Bundles”. In : *Communications in Mathematical Physics* 200.3 (1999), p. 661-683.

[Sch00] Martin Schlichenmaier. “Deformation Quantization of Compact Kähler Manifolds by Berezin-Toeplitz Quantization”. In : *Conférence Moshé Flato 1999*. Springer, 2000, p. 289-306.

[Sim83] Barry Simon. “Some Quantum Operators with Discrete Spectrum but Classically Continuous Spectrum”. In : *Annals of physics* 146.1 (1983), p. 209-220.

[Sjö03] Johannes Sjöstrand. “Resonances Associated to a Closed Hyperbolic Trajectory in Dimension 2”. In : *Asymptotic Analysis* 36.2 (2003), p. 93-113.

[Sjö82] Johannes Sjöstrand. *Singularites Analytiques Microlocales*. T. 95. Astérisque. Soc. Math. de France, 1982.

[Sjö90] Johannes Sjöstrand. “Geometric Bounds on the Density of Resonances for Semiclassical Problems”. In : *Duke mathematical journal* 60.1 (1990), p. 1-57.

[Tia90] Gang Tian. “On a Set of Polarized Kähler Metrics on Algebraic Manifolds”. In : *Journal of Differential Geometry* 32.1 (1990), p. 99-130.

[Tsu10] Hajime Tsuji. “Dynamical Construction of Kähler-Einstein Metrics”. In : *Nagoya Mathematical Journal* 199 (sept. 2010), p. 107-122.

[Ver96] Michèle Vergne. “Multiplicities Formula for Geometric Quantization, Part I”. In : *Duke Mathematical Journal* 82.1 (1996), p. 143-179.

[Vor89] André Voros. “Wentzel-Kramers-Brillouin Method in the Bargmann Representation”. In : *Physical Review A* 40.12 (1989), p. 6814.

[Wan+06] An Wang et al. “The Kähler-Einstein Metric for Some Hartogs Domains over Symmetric Domains”. In : *Science in China Series A : Mathematics* 49.9 (2006), p. 1175-1210.

[ZZ10] Ofer Zeitouni et Steve Zelditch. “Large Deviations of Empirical Measures of Zeros of Random Polynomials”. In : *International Mathematics Research Notices* 2010.20 (2010), p. 3935-3992.

[Zel00] Steve Zelditch. “Szegö Kernels and a Theorem of Tian”. In : *Int. Math. Research Notices* 6 (2000).

[Zel13] Steve Zelditch. “Large Deviations of Empirical Measures of Zeros on Riemann Surfaces”. In : *International Mathematics Research Notices* 2013.3 (2013), p. 592-664.

[Zwo12] Maciej Zworski. *Semiclassical Analysis*. T. 138. American Mathematical Soc., 2012.

Berezin-Toeplitz operators allow to quantize functions, or symbols, on compact Kähler manifolds, and are defined using the Bergman (or Szegő) kernel. We study the spectrum of Toeplitz operators in an asymptotic regime which corresponds to a semiclassical limit. This study is motivated by the atypic magnetic behaviour observed in certain crystals at low temperature.

We study the concentration of eigenfunctions of Toeplitz operators in cases where subprincipal effects (of same order as the semiclassical parameter) discriminate between different classical configurations, an effect known in physics as *quantum selection*. We show a general criterion for quantum selection and we give detailed eigenfunction expansions in the Morse and Morse-Bott case, as well as in a degenerate case.

We also develop a new framework in order to treat Bergman kernels and Toeplitz operators with real-analytic regularity. We prove that the Bergman kernel admits an expansion with exponentially small error on real-analytic manifolds. We also obtain exponential accuracy in compositions and spectra of operators with analytic symbols, as well as exponential decay of eigenfunctions.

INSTITUT DE RECHERCHE MATHÉMATIQUE AVANCÉE
UMR 7501
Université de Strasbourg
CNRS
IRMA, UMR 7501
7 rue René Descartes
F-67000 STRASBOURG

Tél. 03 68 85 01 29

irma.math.unistra.fr
irma@math.unistra.fr

IRMA 2019/003
http://tel.archives-ouvertes.fr/tel-02053539